September 15, 2025

Worcester Township Board of Supervisors
c/o Mr. Dan Demeno, Township Manager
Worcester Township
1721 Valley Forge Road
PO Box 767
Worcester, PA 19490-0767

Re: 1805 Berks Road
Allan Myers Legacy Equipment Museum

Dear Board of Supervisors,

On behalf of A. Ross Myers, applicant and property owner, Howell Engineering has prepared this waiver request letter for your consideration. The necessary waivers requested below have been developed through the plan review process via dialog among our office, the Applicant, the Township's consultants and through discussions with Township staff. These requests for modification are submitted in accordance with the Municipalities Planning Code. Each request is made in a context where literal enforcement of the subdivision and land development ordinance will exact undue hardship because of peculiar conditions pertaining to the land in question. We have reviewed these requested waivers carefully as explained above and we have concluded that none of these waivers, if granted, will be contrary to public interest, and in fact, in the context of the proposed development are to the benefit of the public interest. Moreover, in the case of each request, notwithstanding the approval of the waiver, the purpose and intent of the subdivision and land development ordinance will still be observed.

Waivers Requested:

1. **Section 130-10 and 130-11 A., B., and C. Compliance with procedures required and Overview of submittal and review process. – The process of submitting, reviewing and approving subdivision and land development site plans shall consist of three phases: sketch plan phase (optional), preliminary plan phase and final plan phase.**

   The applicant is requesting a waiver from these Sections to allow for a Waiver of the Land Development Process by satisfying the applicable reviews of Township Consultants. Due to the minor nature of the application and the redevelopment of an equipment storage area for a private legacy equipment museum, we believe the application meets the requirements for a Waiver of Land Development.

2. **Section 130-16.C(2)(c) – The area between an existing right-of-way line and the ultimate right-of-way line should be offered for dedication to the authority having jurisdiction over the road when land is subdivided or developed along an existing right-of-way.**

The applicant is requesting a waiver from this section of the ordinance to not dedicate additional right-of-way to the authority having jurisdiction over the road when the land is developed. We are pursuing this waiver request since there isn't any new development along the existing property frontage and the area within the property is being redeveloped to a lesser extent than the previous equipment storage yard.

3. **Section 130-18.A & B – Sidewalk and Curbs.**

   The applicant is requesting a waiver from this section of the ordinance to not install sidewalk and curbs along Berks Road since they are unnecessary for public safety and convenience and since no other sidewalks in the vicinity of the project that would allow for pedestrian connectivity. The applicant further asks for consideration of this waiver since there are no other site improvements except those associated with the redevelopment area for the museum itself.

   The applicant is also requesting that curbs not be installed within the develop area since the entire site is constructed without curbing to retain its rural character. The applicant has received zoning variance relief to not install curbs within the redevelopment area as part of the decision from the Zoning Hearing Board.

4. **Section 130-28.G.6.f – Raised continuous concrete curbing shall be required around each planting island.**

   The applicant is requesting a waiver from this section of the ordinance not to install curbs within the parking area and around planting islands to retain its rural character. The applicant has received zoning variance relief to not install curbs as part of the decision from the Zoning Hearing Board.

5. **Section 129-18.C.(3) – Minimum pipe size. Minimum pipe diameter shall be 15 inches (or an equivalent flow area of 1.23 square feet).**

   The applicant is requesting a waiver from this section to install roof drainpipes around the building less than 15-inches in diameter due to the minimal flow to those pipes.

If you have any questions or require any additional information, please do not hesitate to contact me.

Sincerely,
Howell Engineering

Joseph S. Russella

Joseph Russella
Director of Operations

Cc: J. Edmund Mullin, Esq., HRMM&L
Michael Gill, Esq., HRMM&L
Wendy Feiss-McKenna. Esq. Township Solicitor
Karen Miller, Brant & Associates, LLC
A. Ross Myers c/o Stephen Shannahan

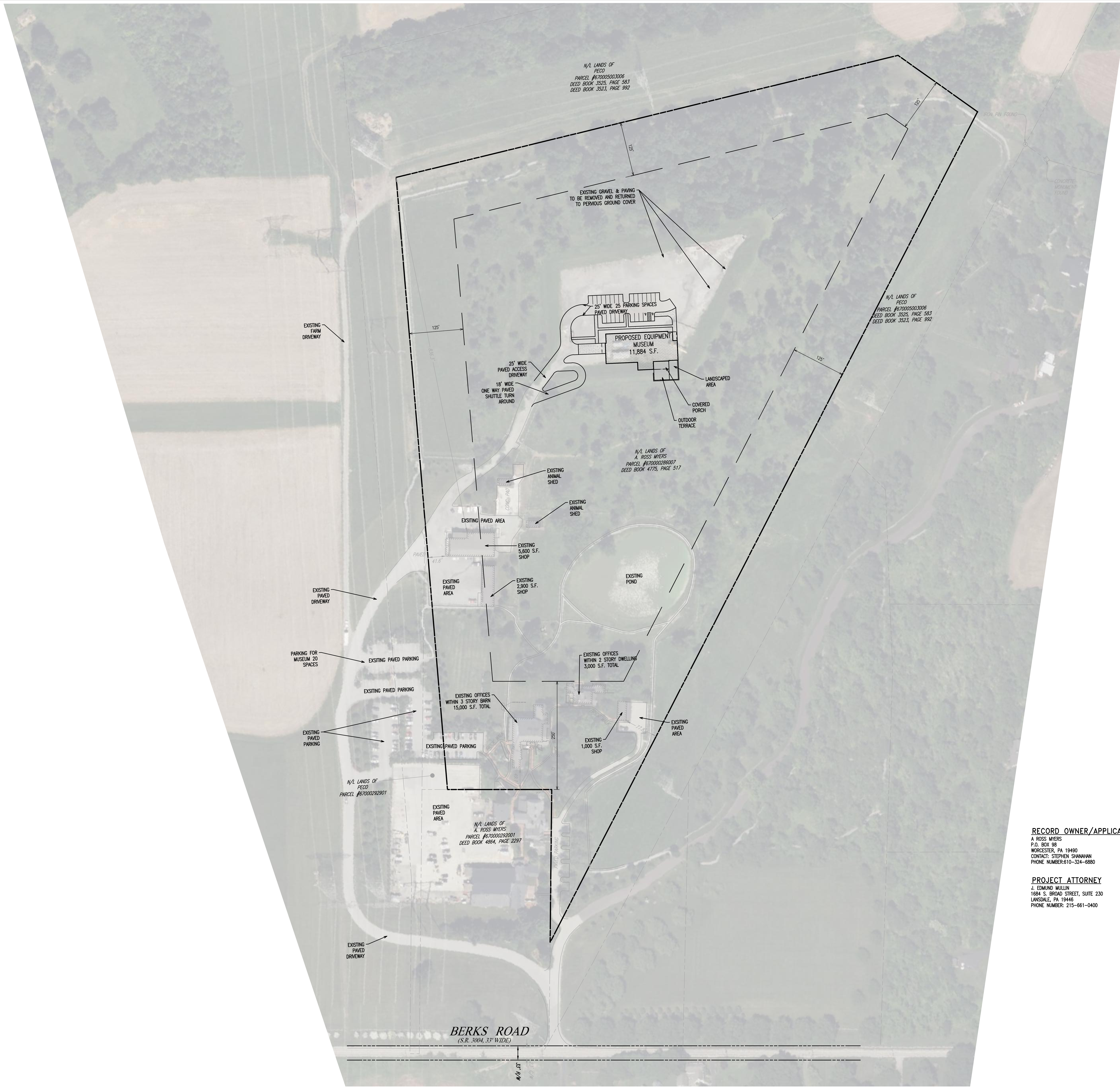

WORCESTER TOWNSHIP BOARD OF SUPERVISORS

APPROVED BY THE BOARD OF SUPERVISORS OF WORCESTER TOWNSHIP MONTGOMERY COUNTY, PENNSYLVANIA, THIS
_______ DAY OF _______________, 20 ___.

____

____

____

CERTIFICATION OF ACCURACY – SURVEYOR

"I HEREBY CERTIFY THAT THE PLAN SHOWN REPRESENTS A SURVEY MADE HIM; THAT THE MONUMENTS SHOWN THEREON EXIST AS LOCATED, AND THAT THE DIMENSIONAL AND GEODETIC DETAILS ARE CORRECT.

_________, 20 ______________________
DATE SIGNATURE OF SURVEYOR

CERTIFICATION OF DESIGN – ENGINEER

I, ___________________ P.E., A REGISTER PROFESSIONAL ENGINEER OF THE COMMONWEALTH OF PENNSYLVANIA, DO HEREBY CERTIFY THAT THE ACCOMPANYING APPLICATION, PLANS AND SUPPORTING DOCUMENTATION ARE TRUE AND CORRECT TO THE BEST OF MY KNOWLEDGE.

_________, 20 ______________________
DATE SIGNATURE OF ENGINEER

MUNICIPAL CODE CHAPTER 290 & 291 LANDOWNER ACKNOWLEDGMENT

I HEREBY CERTIFY THAT ANY REVISION TO THE APPROVED PLAN MUST BE APPROVED BY THE MUNICIPALITY OR CONSERVATION DISTRICT FOR APPROVAL, AND THE STORMWATER FACILITIES AND BMPS SHOWN HEREON ARE FIXTURES THAT CANNOT BE ALTERED OR REMOVED WITHOUT PRIOR APPROVAL BY THE MUNICIPALITY.

____
LANDOWNER

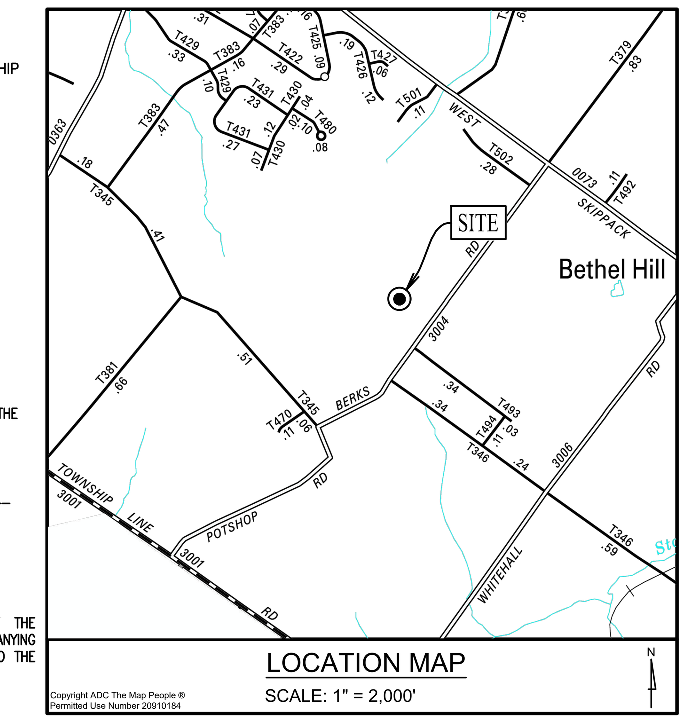

LOCATION MAP
SCALE: 1" = 2,000'

Copyright ADC The Map People ®
Permitted Use Number 20910184

GENERAL SURVEY NOTES

1. RECORD OWNER/MAILING ADDRESS:
   A. ROSS MYERS
   P.O. BOX 98
   WORCESTER, PA 19490
2. SITE ADDRESS: 1805 BERKS ROAD
3. TAX PARCEL #: 670000286007
4. SOURCE OF TITLE: DEED/RECORD BOOK 5349, PAGE 2044
5. LOT AREA: 32.639 ACRES
6. TOPOGRAPHY AND PHYSICAL IMPROVEMENTS SHOWN ARE FROM FIELD SURVEY BY HOWELL SURVEYING, LLC. PERFORMED ON 12/27/2023.
7. THIS MAP AND SURVEY WERE PREPARED FROM INFORMATION OF RECORD, FURNISHED AND/OR OBTAINED, TOGETHER WITH EVIDENCE FOUND ON THE GROUND. THIS PLAN DOES NOT REPRESENT A BOUNDARY SURVEY. THIS SURVEY WAS PERFORMED WITHOUT THE BENEFIT OF A CURRENT TITLE REPORT, WHICH WOULD DISCLOSE ANY RIGHTS, RESERVATIONS, EASEMENTS, ETC... OF RECORD.
8. THIS SURVEY WAS PERFORMED WITHOUT THE BENEFIT OF A CURRENT TITLE REPORT, WHICH WOULD DISCLOSE ANY RIGHTS, RESERVATIONS, EASEMENTS, ETC... OF RECORD.
9. CONTOURS PLOTTED FROM FIELD RUN TOPOGRAPHIC SURVEY BY HOWELL SURVEYING, L.L.C.. DATUM: NAVD 88 (COMPUTED USING GEOID18) & NAD 83 (2011) (EPOCH:2010.0000) (AS DETERMINED BY GPS OBSERVATION), SITE BENCH = NAIL SET AT SOUTHERLY SIDE TOP OF BERM, ELEVATION= 435.00', CONTOUR INTERVAL: 2 FEET.
11. UNDERGROUND UTILITIES SHOWN WERE PLOTTED FROM OBSERVABLE EVIDENCE AT THE TIME OF SURVEY AND INFORMATION FROM PLANS SUPPLIED BY UTILITY COMPANIES. NO GUARANTEE IS MADE THAT UNDERGROUND UTILITIES ARE ACCURATELY OR COMPLETELY SHOWN HEREON.
13. THE EXISTING LEGAL RIGHT-OF-WAY OF S.R. 3004 WAS TAKEN FROM DEED OF RECORD.
14. THIS PROPERTY IS LOCATED WITHIN FLOOD HAZARD ZONE X, AN AREA OF MINIMAL FLOOD HAZARD PER THE NATIONAL FLOOD INSURANCE RATE MAP FOR MONTGOMERY COUNTY, PA. MAP NO. 42091C0262G, DATED MARCH 2, 2016.

IMPERVIOUS TABULATION (ZONING)	
EXISTING IMPERVIOUS	
BUILDINGS	19,072 S.F.
PAVING/ETC.	172,220 S.F.
TOTAL EXISTING	191,292 S.F.
EXISTING TO BE REMOVED	
GRAVEL	96415 S.F.
TOTAL EXISTING T.B.R.	96,415 S.F.
PROPOSED IMPERVIOUS	
BUILDING	11,884 S.F.
COVERED PORCH	635 S.F.
PAVING	27,363 S.F.
CONCRETE	5,433 S.F.
TOTAL PROPOSED	45,315 S.F.
NET INCREASE IN IMP. COV.	−51,100 S.F.
TOTAL IMP. COV. FOR LOT	140,192 S.F.

ARTICLE IV. – AGR DISTRICT AGRICULTURAL DISTRICT

SECTION 150-11 – USE REGULATIONS
EXISTING NON-CONFORMING USES
OFFICE CAMPUS – OFFICES, ASSEMBLY & SHOPS

SECTION 150-166.B. EXPANSION OF NONCONFORMING USES
ASSEMBLY (MUSEUM)

	REQUIRED	EXISTING	PROPOSED
	MAX 25% GROSS FLOOR AREA (BY SPECIAL EXCEPTION) 27,500 S.F. GFA X .25 = 6,875 S.F.	(*) 27,500 S.F. GFA	(**) 11,884 S.F. GFA (**) 57.85% PROPOSED EXPANSION 39,384 S.F. TOTAL S.F. GFA
SECTION 150-12 LOT AREA AND WIDTH REGULATIONS	REQUIRED	EXISTING	PROPOSED
A. MIN. LOT SIZE	80,000 S.F. (.544 ACS)	32.639 ACS. GROSS	32.639 ACS. GROSS
B.(2) MIN. LOT WIDTH @ STREET LINE	250 FT.	N/A	N/A
B.(2) MIN. LOT WIDTH @ BUILDING LINE	250 FT.	449 FT.	449 FT.
SECTION 150-13 YARD REGULATIONS			
B. NON-RESIDENTIAL USES			
(2) MIN. FRONT YARD SETBACK	250 FT.	(*) 49.1 FT.	(*) 49.1 FT.
(2) MIN. SIDE YARDS EACH	125 FT.	(*) 77.8 FT. / (*) 41.6 F.T.	(*) 77.8 FT. / (*) 41.6 F.T.
(2) MIN. REAR YARD SETBACK	125 FT.	836.3 FT.	836.3 FT.
SECTION 150-14 COVERAGE REGULATIONS (RESIDENTIAL, MUNICIPAL OR AGRICUTURAL USE LOTS)			
A. MAX. BUILDING COVERAGE	10 %	1.3 %	2.22 % (31,591 S.F.)
B. MAX. IMPERVIOUS COVERAGE	20 %	13.5 %	9.86 % (140,192 S.F.)
SECTION 150-14 HEIGHT REGULATIONS			
MAX. BUILDING HEIGHT	35 FT. / 2.5 STORIES	<35 FT.	<35 FT.
SECTION 150-16. – PARKING REGULATIONS			
B. NON-RESIDENTIAL USES			
(1) PARKING SHALL NOT OCCUPY ANY OF THE FRONT, SIDE OR REAR YARDS.		(*) OCCUPIED	(*) OCCUPIED
(2) NO PARKING AREA OR DRIVEWAY SHALL BE LOCATED WITHIN 100-FEET OF ANY PROPERTY LINE EXCEPT FOR NORMAL INGRESS AND EGRESS.		(*) 0 FT	(*) 0 FT

(*) EXISTING NON-CONFORMITY
(**) VARIANCE REQUIRED

PARKING TABULATION

ARTICLE XXII. – OFFSTREET PARKING & LOADING

150-153. OFFSTREET PARKING FACILITIES
150-153.B. REQUIRED SPACES SHALL BE CURBED AND PAVED

	REQUIRED	EXISTING	PROPOSED
		(*) NOT CURBED	(**) NOT CURBED
		29 SPACES	
(1) CLASSROOM, ASSEMBLY OR MEETING ROOMS 45 TOTAL SEATS / 3 SEATS = 9 SPACES	1 SPACE/3 SEATS		45 SPACES

RECORD OWNER/APPLICANT

A ROSS MYERS
P.O. BOX 98
WORCESTER, PA 19490
CONTACT: STEPHEN SHANAHAN
PHONE NUMBER:610-324-6880

PROJECT ATTORNEY

J. EDMUND MULLIN
1684 S. BROAD STREET, SUITE 230
LANSDALE, PA 19446
PHONE NUMBER: 215-661-0400

LEGEND

EX. PROPERTY LINE	PROP. PROPERTY LINE
EX. RIGHT-OF-WAY	PROP. RIGHT-OF-WAY
EX. MONUMENT	PROP. MONUMENT
EX. REBAR	PROP. REBAR
EX. EASEMENT	PROP. EASEMENT
EX. WETLANDS	
EXISTING CONTOUR (242)	PROPOSED CONTOUR (242)
EXISTING SPOT ELEV. (X 123.00)	NEW SPOT ELEV. (x 123.00)
SOILS TYPE (GEB2)	SOILS LINE
EX. CONC. CURB	PROP. CONC. CURB
EX. EDGE OF PAVING	PROP. EDGE OF PAVING
EX. LIGHT POLE	PROP. LIGHT POLE
EX. FENCE	
EX. MAIL BOX (MB)	
EX. SIGN	PROP. SIGN
EXIST. PARKING SPACES	PROP. PARKING SPACES
(TBR) TO BE REMOVED	
EX. TELE. LINE	PROP. TELE. LINE
EX. ELEC. LINE	PROP. ELEC. LINE
EX. UTILITY POLE	PROP. UTILITY POLE
EX. GUY ANCHOR	
EX. GAS LINE	PROP. GAS LINE
EX. GAS VALVE (G.V.)	PROP. GAS VALVE (G.V.)
EX. STORM SEWER LINE	PROP. STORM SEWER LINE
EX. STORM INLET	PROP. STORM INLET
	PROP. STORM INLET ID (IC 1)
	PROP. SEEPAGE BED
EX. SANITARY SEWER LINE	PROP. SAN. SEWER LINE
	PROP. SAN. SEWER LATERAL
	PROP. SANITARY MH. ID (MH 1)
EX. WATER LINE	PROP. WATER LINE
	PROP. WATER LATERAL
	PROP. FIRE WATER LINE
EX. WATER VALVE (W.V.)	PROP. WATER VALVE (W.V.)
EX. HYDRANT (F.H.)	PROP. HYDRANT (F.H.)
EX. MANHOLE	PROP. MANHOLE
EX. PERC TEST	
EX. TEST PIT	

OVERALL SITE PLAN

SCALE: 1" = 100'

100 0 50 100 200
GRAPHIC SCALE
1 inch = 100 feet

HOWELL ENGINEERING
Local Knowhow. Engineered.
Civil Engineering | Land Planning | Environmental
1250 Wrights Lane, West Chester, PA 19380
Phone: (610) 918-9002 Fax: (610) 918-9003

COMMONWEALTH OF PENNSYLVANIA
REGISTERED PROFESSIONAL
DENNY L. HOWELL
ENGINEER
053098-E

REV.	DATE	DESCRIPTION
1		
2		
3		
4		
5		
6		
7		
8		

ALLAN MYERS LEGACY EQUIPMENT MUSEUM
OVERALL SITE PLAN

CLIENT: A ROSS MYERS
PROJECT: ALLAN MYERS EQUIPMENT MUSEUM
LOCATION: 1805 BERKS ROAD
WORCESTER TOWNSHIP, MONTGOMERY COUNTY, PA

DATE:	03/10/2025
SCALE:	1"=100'
DRAWN BY:	NAR
CHECKED BY:	JSR
PROJECT NO.:	4886
CAD FILE:	01 OVERALL SITE PLAN.dwg
PLOTTED:	03/10/2025
DRAWING NO.:	C01.1
SHEET	01 OF 18

Q:\CIVIL 3D JOBS\4886\4886 PRODUCTION PLANS\SHEET SET\SUBDIVISION & LD\01 OVERALL SITE PLAN.DWG

COPYRIGHT 2021 D.L. HOWELL & ASSOCIATES, INC. – ALL RIGHTS RESERVED. THESE PLANS ARE THE PROPERTY OF D.L. HOWELL & ASSOCIATES, INC. ANY USE OR REPRODUCTION OF THESE PLANS IN WHOLE OR PART, WITHOUT THE WRITTEN PERMISSION OF D.L. HOWELL & ASSOCIATES, INC. IS FORBIDDEN.

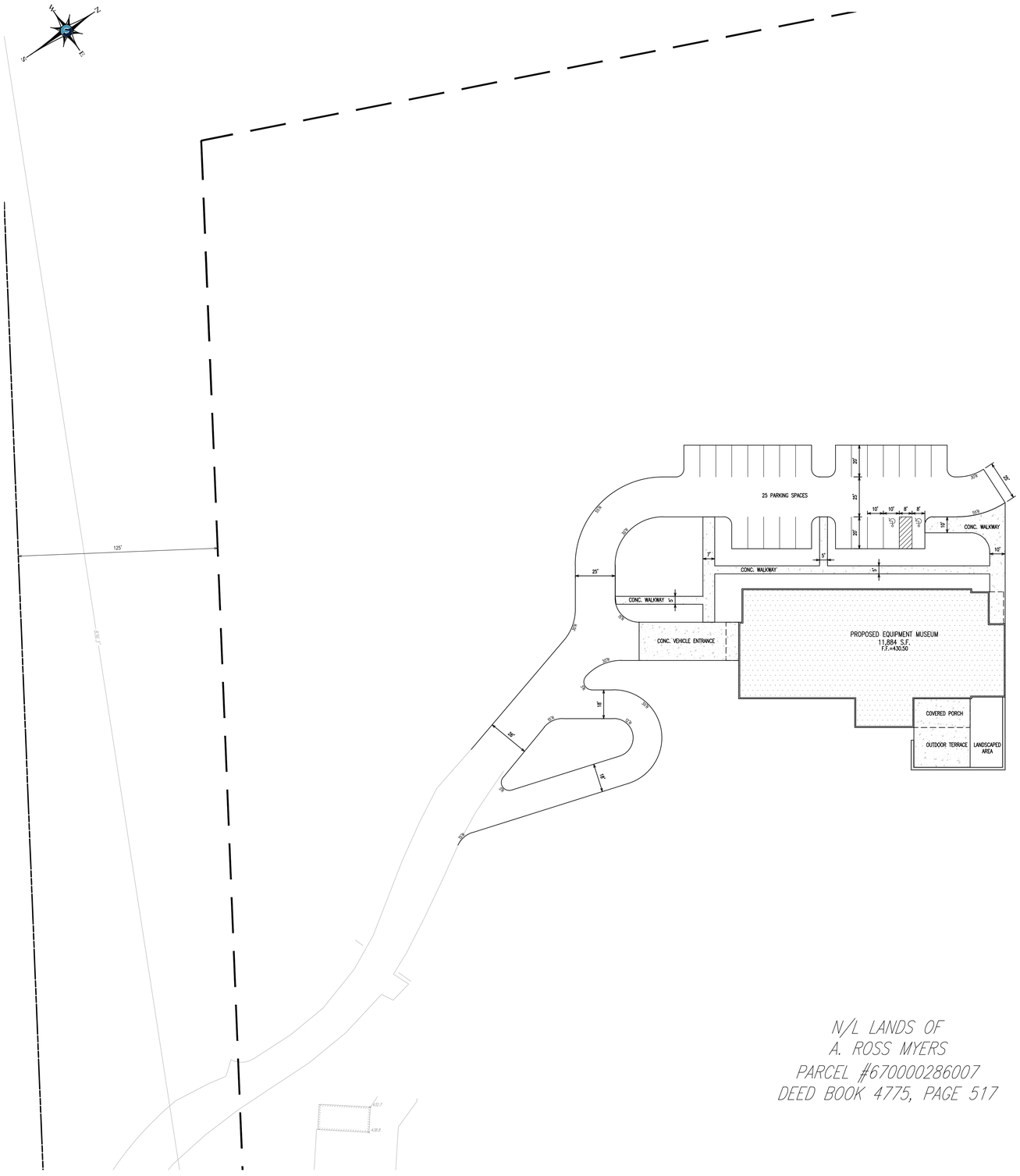

LEGEND

EX. PROPERTY LINE	242	EXISTING CONTOUR	PROP. LIGHT POLE	E	PROP. ELEC. LINE		PROP. STORM INLET	W	PROP. WATER LINE
PROP. PROPERTY LINE	242	PROPOSED CONTOUR	EX. FENCE		EX. UTILITY POLE	IC 1	PROP. STORM INLET ID	WL	PROP. WATER LATERAL
EX. RIGHT-OF-WAY	x 123.00	EXISTING SPOT ELEV.	EX. MAIL BOX		PROP. UTILITY POLE		PROP. SEEPAGE BED	FW	PROP. FIRE WATER LINE
PROP. RIGHT-OF-WAY	x 123.00	NEW SPOT ELEV.	EX. SIGN		EX. GUY ANCHOR			W.V.	PROP. WATER VALVE
EX. MONUMENT	GEB2	SOILS TYPE	PROP. SIGN	G	EX. GAS LINE	S	EX. SANITARY SEWER LINE	F.H.	EX. HYDRANT
PROP. MONUMENT		SOILS LINE	EXIST. PARKING SPACES	G	PROP. GAS LINE	S	PROP. SAN. SEWER LINE	F.H.	PROP. HYDRANT
EX. REBAR		EX. CONC. CURB	PROP. PARKING SPACES	G.V.	EX. GAS VALVE	L	PROP. SAN. SEWER LATERAL		EX. MANHOLE
PROP. REBAR		PROP. CONC. CURB	TO BE REMOVED	G.V.	PROP. GAS VALVE				PROP. MANHOLE
EX. EASEMENT		EX. EDGE OF PAVING	(TBR)		EX. STORM SEWER LINE	MH 1	PROP. SANITARY MH. ID		EX. PERC TEST
PROP. EASEMENT		PROP. EDGE OF PAVING	T		PROP. STORM SEWER LINE				EX. TEST PIT
EX. WETLANDS		EX. LIGHT POLE	T		EX. ELEC. LINE		EX. STORM INLET	W	EX. WATER LINE

UPI#: 670003454007

ENLARGED SITE PLAN

SCALE: 1"=30'

30 0 15 30 60

GRAPHIC SCALE
1 inch = 30 feet

BEFORE THE ZONING HEARING BOARD OF WORCESTER TOWNSHIP
MONTGOMERY COUNTY, PENNSYLVANIA

IN RE: APPLICATION OF
A. ROSS MYERS

NO. 2024-26

DECISION

The Applicant, A. Ross Myers, owner of record of 1805 Berks Road, Worcester Township, Montgomery County, PA, TPN #67-00-00286-00-7, located in the AGR Agricultural Zoning District, proposes to construct and use a Legacy Equipment Museum on the property. A public hearing on the above Application was held on January 21, 2025 at the Worcester Township Community Hall, 1031 Valley Forge Road, Fairview Village, Pennsylvania, pursuant to Notice as required by the Worcester Township Zoning Ordinance, as amended (hereinafter "Zoning Ordinance") and the Pennsylvania Municipalities Planning Code. Upon consideration of the evidence and testimony presented regarding the Application, the Zoning Hearing Board of Worcester Township enters the following Order:

ORDER

A special exception under Section 150-166.B, so as to permit the expansion of a non-conforming use, and the construction and use of the proposed building, is **GRANTED**.

A variance from Section 150-166.B, so as to permit the expansion of a non-conforming use, and the construction and use of the proposed building, is **GRANTED**.

A variance from Section 150-153.B, so as to permit the related parking spaces without curbing, is **GRANTED**.

The requests for interpretations and a use variance under Section 150-11 of the Zoning Ordinance were withdrawn.

This Decision is subject to the following conditions:

1. The Applicant shall construct and use the building substantially as set forth in the testimony and Exhibits A-1 through A-12.
2. The Applicant shall apply for and obtain all applicable Township, County and State permits and approvals relative to the use in a timely manner.
3. All use and development permitted by this Decision shall conform to the exhibits and testimony presented by the Applicant, unless inconsistent with any specific conditions imposed by this Board, in which case these specific conditions shall take precedence.
4. Except as permitted by prior Decisions of this Board, the use of the subject property shall otherwise comply with the Worcester Township Code, including, but not limited to, all storm water management, fencing, setback, parking, lighting, sign, and noise regulations, and all other codes, regulations and ordinances of Worcester Township.
5. Pursuant to Section 150-225 of the Worcester Township Zoning Ordinance, a special exception or variance shall expire if the applicant fails to obtain a permit in connection therewith within one (1) year of the date of authorization thereof. When land development/subdivision approval is required, the special exception or variance shall expire if the applicant fails to make a diligent effort to obtain such approval within six (6) months following the date of the Zoning Hearing Board's Order. Upon receipt of land development/subdivision approval, the special exception or variance shall expire if a building permit is not obtained within six (6) months of the date of the land development/subdivision approval.

WORCESTER TOWNSHIP ZONING HEARING BOARD

Michael Libor, Chair

John D'Lauro, Vice Chair

Caesar Gamigone, Secretary

Bradford Smith

Order Entered and Issued: 1/29/2025

This Decision and Order of the Board is final and any appeal of it must be filed with the Court of Common Pleas of Montgomery County within thirty (30) days following the date set forth above. The Board reserves the right to prepare Findings of Fact and Conclusions of Law in support of this Decision if an appeal is filed.

HOWELL ENGINEERING
Local Knowhow. Engineered.
Civil Engineering | Land Planning | Environmental
1250 Wrights Lane, West Chester, PA 19380
Phone: (610) 918-9002 Fax: (610) 918-9003

COMMONWEALTH OF PENNSYLVANIA
REGISTERED PROFESSIONAL
DENNY L. HOWELL
ENGINEER
GS-3006-E

REV.	DATE	DESCRIPTION
1		
2		
3		
4		
5		
6		
7		
8		

GRADING PERMIT
ENLARGED SITE PLAN
CLIENT: A ROSS MYERS
PROJECT: ALLAN MYERS EQUIPMENT MUSEUM
LOCATION: 1805 BERKS ROAD
WORCESTER TOWNSHIP, MONTGOMERY COUNTY, PA

DATE:	03/10/2025
SCALE:	1"=30'
DRAWN BY:	NAR
CHECKED BY:	JSR
PROJECT NO.:	4886
CAD FILE:	02 ENLARGED SITE PLAN.dwg
PLOTTED:	03/10/2025
DRAWING NO.:	C02.1
SHEET	02 of 18

COPYRIGHT 2021 D.L. HOWELL & ASSOCIATES, INC. - ALL RIGHTS RESERVED. THESE PLANS ARE THE PROPERTY OF D.L. HOWELL & ASSOCIATES, INC. ANY USE OR REPRODUCTION OF THESE PLANS IN WHOLE OR PART, WITHOUT THE WRITTEN PERMISSION OF D.L. HOWELL & ASSOCIATES, INC. IS FORBIDDEN.

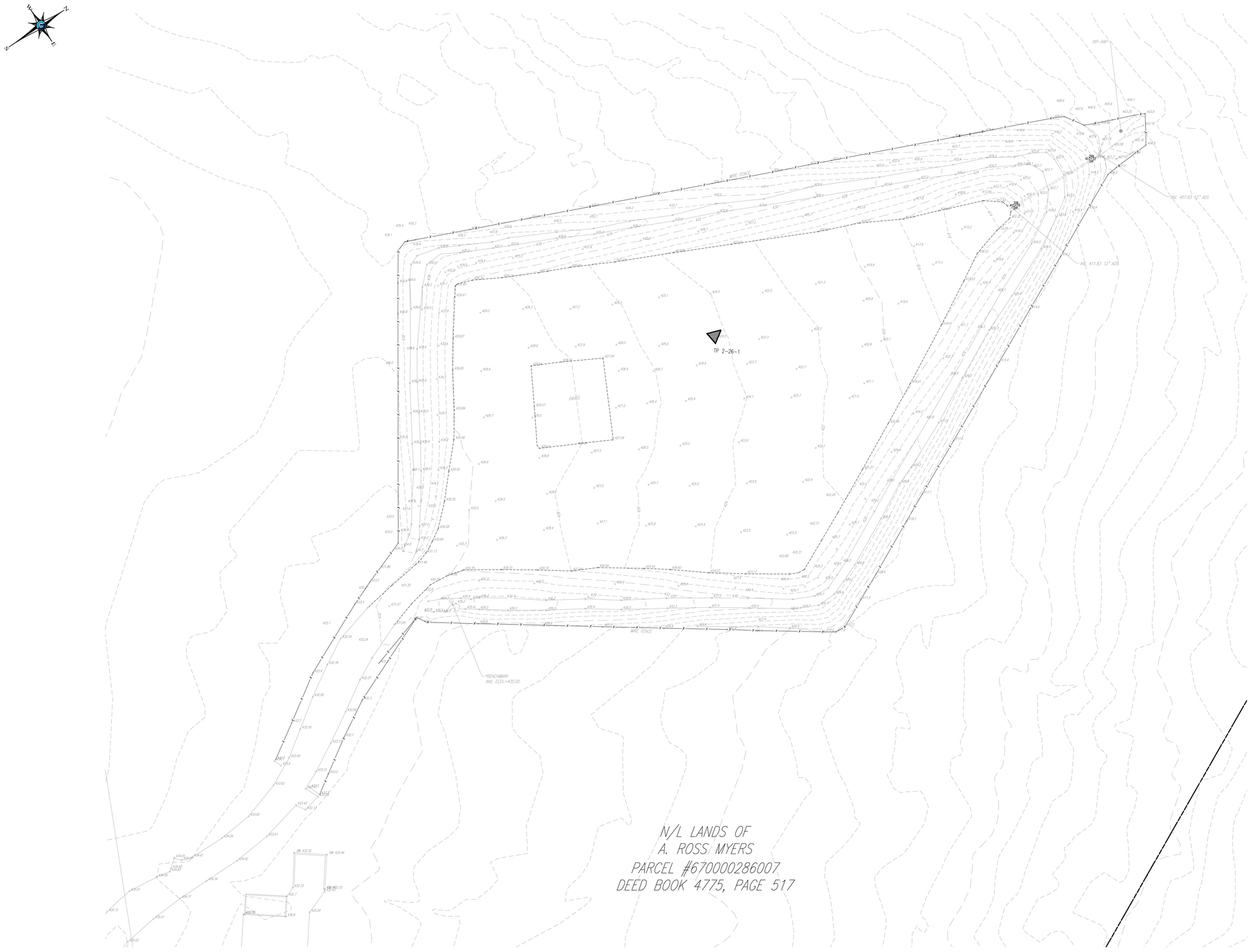

GENERAL NOTES

1. RECORD OWNER/MAILING ADDRESS:
   ROSS A. MYERS
   P.O. BOX 98
   WORCESTER, PA 19490
2. SITE ADDRESS: 1805 BERKS ROAD
3. TAX PARCEL #: 670003454007
4. SOURCE OF TITLE: DEED/RECORD BOOK 5349, PAGE 2044
5. LOT AREA: 32.639 ACRES
6. TOPOGRAPHY AND PHYSICAL IMPROVEMENTS SHOWN ARE FROM FIELD SURVEY BY HOWELL SURVEYING, LLC. PERFORMED ON 12/27/2023.
7. THIS MAP AND SURVEY WERE PREPARED FROM INFORMATION OF RECORD, FURNISHED AND/OR OBTAINED, TOGETHER WITH EVIDENCE FOUND ON THE GROUND. THIS PLAN DOES NOT REPRESENT A BOUNDARY SURVEY. THIS SURVEY WAS PERFORMED WITHOUT THE BENEFIT OF A CURRENT TITLE REPORT, WHICH WOULD DISCLOSE ANY RIGHTS, RESERVATIONS, EASEMENTS, ETC... OF RECORD.
8. THIS SURVEY WAS PERFORMED WITHOUT THE BENEFIT OF A CURRENT TITLE REPORT, WHICH WOULD DISCLOSE ANY RIGHTS, RESERVATIONS, EASEMENTS, ETC... OF RECORD.
9. CONTOURS PLOTTED FROM FIELD RUN TOPOGRAPHIC SURVEY BY HOWELL SURVEYING, L.L.C.. DATUM: NAVD 88 (COMPUTED USING GEOID18) & NAD 83 (2011) (EPOCH:2010.0000) (AS DETERMINED BY GPS OBSERVATION), SITE BENCH = NAIL SET AT SOUTHERLY SIDE TOP OF BERM, ELEVATION= 435.00', CONTOUR INTERVAL: 2 FEET.
11. UNDERGROUND UTILITIES SHOWN WERE PLOTTED FROM OBSERVABLE EVIDENCE AT THE TIME OF SURVEY AND INFORMATION FROM PLANS SUPPLIED BY UTILITY COMPANIES. NO GUARANTEE IS MADE THAT UNDERGROUND UTILITIES ARE ACCURATELY OR COMPLETELY SHOWN HEREON.
13. THE EXISTING LEGAL RIGHT-OF-WAY OF S.R. 3004 WAS TAKEN FROM DEED OF RECORD.
14. THIS PROPERTY IS LOCATED WITHIN FLOOD HAZARD ZONE X, AN AREA OF MINIMAL FLOOD HAZARD PER THE NATIONAL FLOOD INSURANCE RATE MAP FOR MONTGOMERY COUNTY, PA. MAP NO. 42091C0282G, DATED MARCH 2, 2016.

LEGEND

- EX. PROPERTY LINE
- PROP. PROPERTY LINE
- EX. RIGHT-OF-WAY
- PROP. RIGHT-OF-WAY
- EX. MONUMENT
- PROP. MONUMENT
- EX. REBAR
- PROP. REBAR
- EX. EASEMENT
- PROP. EASEMENT
- EX. WETLANDS
- 242 EXISTING CONTOUR
- 242 PROPOSED CONTOUR
- x 123.00 EXISTING SPOT ELEV.
- x 123.00 NEW SPOT ELEV.
- CE252 SOILS TYPE
- SOILS LINE
- EX. CONC. CURB
- PROP. CONC. CURB
- EX. EDGE OF PAVING
- PROP. EDGE OF PAVING
- EX. LIGHT POLE
- PROP. LIGHT POLE
- EX. FENCE
- EX. MAIL BOX
- EX. SIGN
- PROP. SIGN
- EXIST. PARKING SPACES
- PROP. PARKING SPACES TO BE REMOVED (TBR)
- EX. TELE. LINE
- PROP. TELE. LINE
- EX. ELEC. LINE
- PROP. ELEC. LINE
- EX. UTILITY POLE
- PROP. UTILITY POLE
- EX. GUY ANCHOR
- EX. GAS LINE
- PROP. GAS LINE
- EX. GAS VALVE
- PROP. GAS VALVE
- EX. STORM SEWER LINE
- PROP. STORM SEWER LINE
- EX. STORM INLET
- PROP. STORM INLET
- PROP. STORM INLET ID
- PROP. SEEPAGE BED
- EX. SANITARY SEWER LINE
- PROP. SAN. SEWER LINE
- PROP. SAN. SEWER LATERAL
- PROP. SANITARY MH. ID
- EX. WATER LINE
- PROP. WATER LINE
- PROP. WATER LATERAL
- PROP. FIRE WATER LINE
- EX. WATER VALVE
- PROP. WATER VALVE
- EX. HYDRANT
- PROP. HYDRANT
- EX. MANHOLE
- PROP. MANHOLE
- EX. PERC TEST
- EX. TEST PIT

EXISTING CONDITIONS PLAN

SCALE: 1" = 30'

50 0 25 50 100

GRAPHIC SCALE
1 inch = 50 feet

UPI#: 670003454007

HOWELL ENGINEERING
Local Knowhow. Engineered.
Civil Engineering | Land Planning | Environmental
1250 Wrights Lane, West Chester, PA 19380
Phone: (610) 918-9002 Fax: (610) 918-9003

COMMONWEALTH OF PENNSYLVANIA
REGISTERED PROFESSIONAL
DENNY L. HOWELL
ENGINEER
DL-3036-E

REV.	DATE	DESCRIPTION
1		
2		
3		
4		
5		
6		
7		
8		

GRADING PERMIT

EXISTING CONDITIONS PLAN

CLIENT: A ROSS MYERS
PROJECT: ALLAN MYERS EQUIPMENT MUSEUM
LOCATION: 1805 BERKS ROAD
WORCESTER TOWNSHIP, MONTGOMERY COUNTY, PA

DATE:	03/10/2025
SCALE:	1"=30'
DRAWN BY:	NAR
CHECKED BY:	JSR
PROJECT NO.:	4886
CAD FILE:	C3 EXISTING CONDITIONS PLAN.dwg
PLOTTED:	03/10/2025
DRAWING NO.:	C03.1
SHEET	03 of 18

COPYRIGHT 2021 D.L. HOWELL & ASSOCIATES, INC. – ALL RIGHTS RESERVED. THESE PLANS ARE THE PROPERTY OF D.L. HOWELL & ASSOCIATES, INC. ANY USE OR REPRODUCTION OF THESE PLANS IN WHOLE OR PART, WITHOUT THE WRITTEN PERMISSION OF D.L. HOWELL & ASSOCIATES, INC. IS FORBIDDEN.

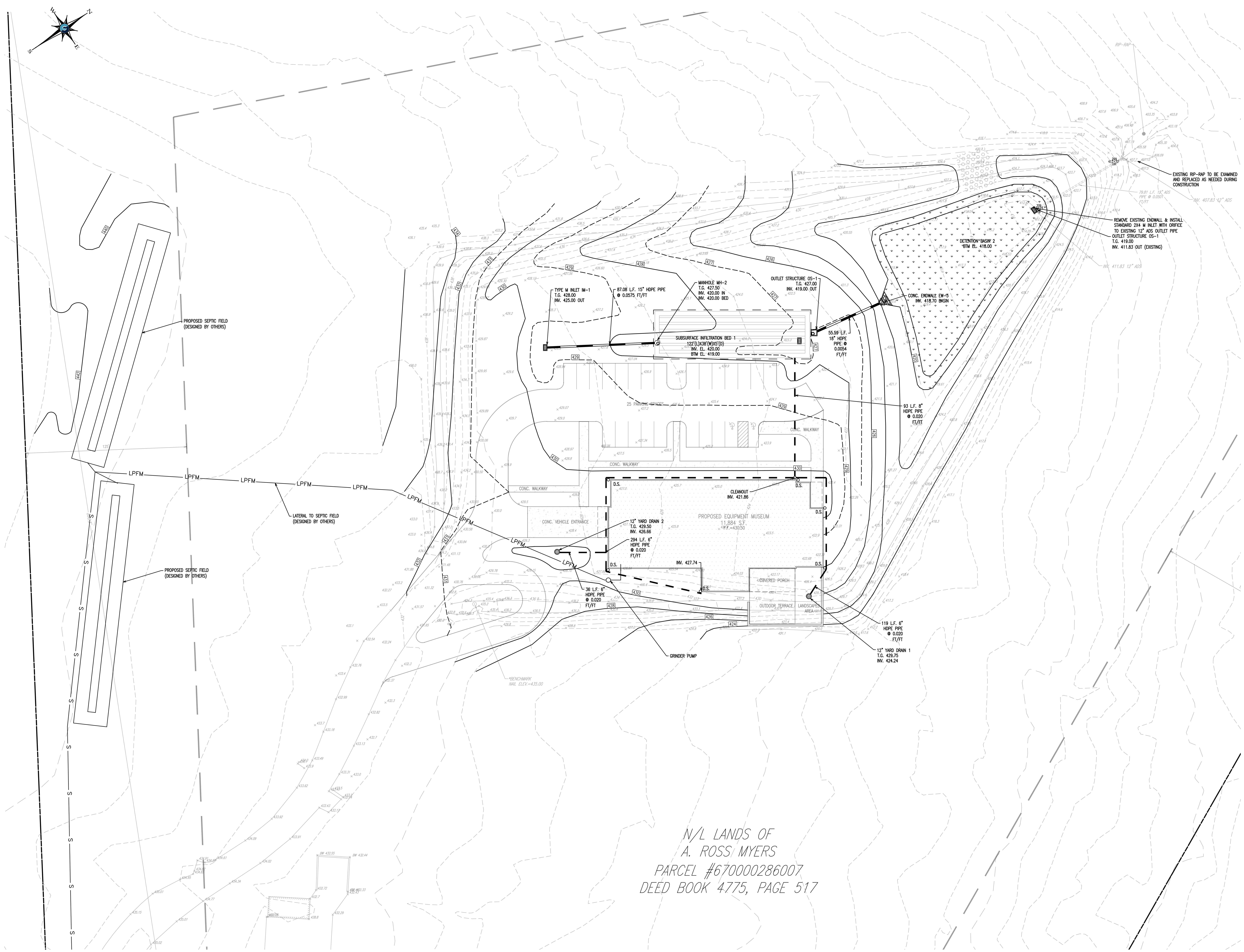

GRADING & UTILITY GENERAL NOTES:

1. PRIOR TO STARTING CONSTRUCTION, ALL UTILITY SERVICES IN THE AREA SHALL BE LOCATED AND MEASURES TAKEN TO PROTECT THE EXISTING FACILITIES. ANY DAMAGE TO EXISTING FACILITIES SHALL BE IMMEDIATELY AND COMPLETELY REPAIRED BY THE CONTRACTOR AT THE CONTRACTOR'S EXPENSE.
2. IT SHALL BE THE RESPONSIBILITY OF THE CONTRACTOR TO NOTIFY THE UTILITY "ONE-CALL" NUMBER 72 HOURS PRIOR TO COMMENCING ANY CONSTRUCTION ACTIVITIES ON THIS SITE. CONTRACTOR SHALL ALSO NOTIFY LOCAL WATER AND SEWER DEPARTMENTS TO MARK OUT THEIR UTILITIES IF NECESSARY.
3. LOCATIONS OF EXISTING UTILITIES SHOWN HEREON HAVE BEEN DEVELOPED FROM FIELD SURVEY AND EXISTING RECORDS. COMPLETENESS AND ACCURACY OF EXISTING UTILITY INFORMATION IS NOT GUARANTEED. PRIOR TO THE START OF ANY CONSTRUCTION, THE CONTRACTOR SHALL ACCURATELY FIELD MEASURE LOCATION AND ELEVATION OF EXISTING UTILITIES AT POINTS OF CONNECTION AND POTENTIAL CONFLICT. THE CONTRACTOR SHALL IMMEDIATELY NOTIFY THE OWNER AND ENGINEER IN WRITING OF ANY DEVIATION FROM INFORMATION SHOWN ON THESE PLANS. CONSTRUCTION SHALL COMMENCE BEGINNING AT THE LOWEST INVERT (POINT OF CONNECTION) AND PROGRESS UP GRADIENT. INTERFACE POINTS (CROSSINGS) WITH EXISTING UNDERGROUND INSTALLATIONS SHALL BE FIELD VERIFIED BY TEST PIT PRIOR TO COMMENCEMENT OF CONSTRUCTION.
4. CONSTRUCTION SHALL BE LOCATED, AND MEASURES TAKEN TO PROTECT THE EXISTING FACILITIES IN ACCORDANCE WITH PENNSYLVANIA ACT 187. ANY DAMAGE TO EXISTING FACULTIES RESULTING FROM THE NEGLIGENCE OF THE CONTRACTOR SHALL BE IMMEDIATELY AND COMPLETELY REPAIRED AT THE CONTRACTOR'S EXPENSE.
5. THE CONTRACTOR SHALL BE RESPONSIBLE TO PROTECT ALL PERSONS, VEHICLES AND BUILDINGS WITHIN THE CONSTRUCTION AREAS FROM INJURY AND DAMAGE DURING THE COURSE OF WORK.
6. SITE GRADING SHALL BE PERFORMED IN ACCORDANCE WITH THESE PLANS AND SPECIFICATIONS.
7. CONTRACTOR IS RESPONSIBLE FOR VERIFICATION OF EXISTING TOPOGRAPHIC INFORMATION PRIOR TO COMMENCEMENT OF ANY CONSTRUCTION. CONTRACTOR TO ENSURE 1.0% MIN. SLOPE ON ASPHALT AND 2.0% MIN. ON GRASS, TO PREVENT PONDING. ANY DISCREPANCIES THAT MAY AFFECT THE PUBLIC SAFETY OR PROJECT COST, MUST BE IDENTIFIED TO THE ENGINEER IN WRITING IMMEDIATELY. PROCEEDING WITH CONSTRUCTION WITH DESIGN DISCREPANCIES IS DONE SO AT THE CONTRACTOR'S OWN RISK.
8. ALL SITE IMPROVEMENTS SHALL BE CONSTRUCTED IN ACCORDANCE WITH THE APPLICABLE LOCAL, COUNTY, STATE AND FEDERAL STATUTES AND REGULATIONS.
9. ALL TRENCHING, SHORING AND EXCAVATING OPERATIONS SHALL BE PERFORMED IN COMPLIANCE WITH THE REQUIREMENTS OF THE U.S. DEPARTMENT OF LABOR, OCCUPATIONAL SAFETY AND HEALTH ADMINISTRATION (OSHA).
10. SCALED DIMENSIONS FROM THIS PLAN SHALL NOT BE USED FOR CONSTRUCTION WITHOUT CONFIRMATION FROM D.L. HOWELL & ASSOC., INC.
11. SUBBASE MATERIAL FOR ASPHALT SHALL BE FREE OF ORGANICS AND OTHER UNSUITABLE MATERIALS. IF ANY UNSUITABLE SOIL IS ENCOUNTERED DURING EXCAVATION, THE CONTRACTOR SHALL REMOVE IT AND REPLACE TO THE RECOMMENDATIONS OUTLINED IN A GEOTECHNICAL EVALUATION PREPARED SPECIFICALLY FOR THIS SITE.
12. IT SHALL BE THE RESPONSIBILITY OF THE CONTRACTOR TO NOTIFY THE LOCAL AUTHORITY OR GOVERNING AGENCY OF THE BEGINNING DATE OF CONSTRUCTION AND TO ENSURE THAT NO WORK IS PERFORMED WITHOUT THE REQUIRED PERMITS AND INSPECTIONS BY THE LOCAL AUTHORITY OR GOVERNING AGENCY.
13. IF CONDITIONS ON THE GROUND DIFFER FROM THOSE SHOWN ON THE PLAN, THE CONTRACTOR SHALL NOTIFY IMMEDIATELY IN WRITING THE ENGINEER OF RECORD.
14. THE CONTRACTOR SHALL BE RESPONSIBLE FOR ALL REQUIRED TRAFFIC CONTROL, SHEETING, SHORING AND BARRICADING OF OPEN EXCAVATIONS.
15. ALL MANHOLES SHALL BE PRECAST CONCRETE.
16. THE CONTRACTOR SHALL SUPERVISE AND DIRECT THE WORK AND BE SOLELY RESPONSIBLE FOR AND HAVE CONTROL OVER CONSTRUCTION MEANS, METHODS, TECHNIQUES, SEQUENCES AND PROCEDURES, SAFETY PRECAUTIONS, AND PROGRAMS IN CONNECTION WITH THE WORK AND FOR COORDINATION OF ALL PORTIONS OF THE WORK UNDER CONTRACT.
17. CONTRACTOR SHALL REVIEW VARIOUS PHASES OF WORK WITH THE OWNER TO DETERMINE WHETHER ANY PHASE WILL CONFLICT WITH THE OWNERS DAILY OPERATIONS. WHERE CONFLICT IS APPARENT THE CONTRACTOR SHALL COORDINATE WITH THE OWNER THE WORK TO BE PERFORMED SO AS TO BE THE LEAST DISRUPTIVE.
18. ANY PAVING DAMAGED DURING CONSTRUCTION ACTIVITIES SHALL BE REMOVED TO SUBGRADE AND REPLACED AT THE CONTRACTOR'S EXPENSE. REPLACEMENT PAVING SHALL MATCH THE EXISTING PAVEMENT SECTION.
19. IN ANY AREA SUBJECT TO VEHICULAR ACTIVITY DURING CONSTRUCTION, A MINIMUM OF 18 INCHES OF COVER SHALL BE MAINTAINED FOR ALL UNDERGROUND UTILITIES (STORMWATER, SANITARY SEWER, WATER, ELECTRIC, GAS, ETC.)
20. ALL FILL SHALL BE COMPACTED TO PROVIDE STABILITY OF MATERIAL AND TO PREVENT UNDESIRABLE SETTLEMENTS. THE FILL SHALL BE SPREAD IN A SERIES OF LAYERS, NOT EXCEEDING EIGHT INCHES IN THICKNESS, AND BE COMPACTED BY A SHEEPSFOOT ROLLER OR OTHER APPROVED METHOD AFTER EACH LAYER IS SPREAD. THE TOWNSHIP ENGINEER MAY REQUIRE COMPACTION TESTS AND REPORTS.
21. IF THE CONTRACTOR RUNS INTO HIGH WATER TABLE, SHALLOW BEDROCK, OR SOIL INSTABILITY THE DESIGN ENGINEER OR THE ON-SITE GEOTECHNICAL ENGINEER MUST BE CONTACTED IMMEDIATELY BEFORE ANY ADDITIONAL WORK IS COMPLETED.
22. ALL OTHER UTILITY LINES, INCLUDING, BUT NOT LIMITED TO, ELECTRIC, GAS, STREETLIGHT SUPPLY, CABLE TELEVISION, AND TELEPHONE, SHALL BE PLACED UNDERGROUND. INSTALLATION OF UTILITIES SHALL BE IN STRICT ACCORDANCE WITH THE ENGINEERING STANDARDS AND SPECIFICATIONS OF THE TOWNSHIP OR PUBLIC UTILITY CONCERNED. UNDERGROUND UTILITIES SHALL BE PUT IN PLACE, CONNECTED, AND APPROVED BEFORE THE STREETS ARE CONSTRUCTED WHERE SUCH UTILITIES LIE UNDER THE PROPOSED CARTWAY AND BEFORE ANY PERSON IS PERMITTED TO OCCUPY ANY BUILDING SERVED BY SUCH FACILITIES.
23. ALL STORM SEWERS SHALL BE CONSTRUCTED PER PENNDOT SPECIFICATIONS AS OUTLINED IN PUBLICATION 408 DESIGN MANUAL.
24. ALL MATERIALS USED AND ALL CONSTRUCTION METHODS EMPLOYED SHALL BE IN ACCORDANCE WITH THE LATEST EDITION OF THE STANDARD CONSTRUCTION AND MATERIALS SPECIFICATION FOR SANITARY SEWER EXTENSIONS FOR THE LOWER PROVIDENCE TOWNSHIP SEWER AUTHORITY.
25. THE PROPOSED BUILDING WILL BE ON SLAB AND NOT HAVE A BASEMENT.
26. NO PLANTING WILL OCCUR WITHIN 10' OF THE SANITARY SEWER LATERAL.
27. PRIOR TO COMMENCING CONSTRUCTION, ALL MATERIALS TO BE USED ON THE JOB MUST BE INSPECTED BY A REPRESENTATIVE OF THE LOWER PROVIDENCE SEWER AUTHORITY. THIS INSPECTION IS TO ENSURE CONFORMANCE WITH THE APPROVED SHOP DRAWINGS.
28. THE PROPOSED FINISHED GRADING SHOWN ON THIS PLAN HAS BEEN SHOWN FOR THE PURPOSE OF STORMWATER MANAGEMENT DESIGN. THE CONTRACTOR SHALL COMPLY WITH THE GRADING SCHEME AS SHOWN UNLESS OTHERWISE APPROVED BY THE TOWNSHIP AND DESIGN ENGINEER.
29. A MINIMUM OF 8" OF TOPSOIL SHALL BE PLACED ON ALL LAWN AREA AND PLANTING AREAS. ALL SLOPES 3:1 OR GREATER WILL REQUIRE THE PLACEMENT OF AN APPROVED EROSION CONTROL BLANKET AFTER SEEDING TO PREVENT EROSION OF NEWLY GRADED AREAS.
30. THE CONTRACTOR SHALL BE RESPONSIBLE FOR REMOVING AND REPLACING ALL SOFT, YIELDING OR UNSUITABLE MATERIALS AND REPLACING IT WITH SUITABLE STRUCTURAL FILL AND/OR STONE. ALL EXCAVATED OR FILLED AREAS SHALL BE COMPACTED TO 95% OF MODIFIED PROCTOR MAXIMUM DENSITY PER ASTM D-1557, MOISTURE CONTENT AT TIME OF PLACEMENT SHALL BE NO MORE THAN 2% ABOVE, NOR MORE THAN 3% BELOW OPTIMUM. THE CONTRACTOR SHALL SUBMIT A COMPACTION REPORT PREPARED BY A QUALIFIED SOILS ENGINEERING FIRM, REGISTERED WITH THE STATE, VERIFYING THAT ALL FILLED AREAS AND SUBGRADE AREAS WITHIN THE BUILDING PADS, PAVING AREAS AND BASIN CORES HAVE BEEN COMPACTED IN ACCORDANCE WITH THESE SPECIFICATIONS.
31. ALL INLET GRATES PROPOSED IN CONJUNCTION WITH THIS DEVELOPMENT SHALL BE BICYCLE SAFE GRATES.

LEGEND

EX. PROPERTY LINE
PROP. PROPERTY LINE
EX. RIGHT-OF-WAY
PROP. RIGHT-OF-WAY
EX. MONUMENT
PROP. MONUMENT
EX. REBAR
PROP. REBAR
EX. EASEMENT
PROP. EASEMENT
EX. WETLANDS
242 EXISTING CONTOUR
242 PROPOSED CONTOUR
X 123.00 EXISTING SPOT ELEV.
x 123.00 NEW SPOT ELEV.
GEB2 SOILS TYPE
SOILS LINE
EX. CONC. CURB
PROP. CONC. CURB
EX. EDGE OF PAVING
PROP. EDGE OF PAVING
EX. LIGHT POLE
PROP. LIGHT POLE
EX. FENCE
EX. MAIL BOX
EX. SIGN
PROP. SIGN
EXIST. PARKING SPACES
PROP. PARKING SPACES
(TBR) TO BE REMOVED
EX. TELE. LINE
PROP. TELE. LINE
EX. ELEC. LINE
PROP. ELEC. LINE
EX. UTILITY POLE
PROP. UTILITY POLE
EX. GUY ANCHOR
EX. GAS LINE
PROP. GAS LINE
EX. GAS VALVE
PROP. GAS VALVE
EX. STORM SEWER LINE
PROP. STORM SEWER LINE
EX. STORM INLET
PROP. STORM INLET
PROP. STORM INLET ID
PROP. SEEPAGE BED
EX. SANITARY SEWER LINE
PROP. SAN. SEWER LINE
PROP. SAN. SEWER LATERAL
PROP. SANITARY MH. ID
EX. WATER LINE
PROP. WATER LINE
PROP. WATER LATERAL
PROP. FIRE WATER LINE
EX. WATER VALVE
PROP. WATER VALVE
EX. HYDRANT
PROP. HYDRANT
EX. MANHOLE
PROP. MANHOLE
EX. PERC TEST
EX. TEST PIT

GRADING & UTILITIES PLAN

SCALE: 1"=30'

30 0 15 30 60

GRAPHIC SCALE
1 inch = 30 feet

UPI#: 670003454007

HOWELL ENGINEERING
Local Knowhow. Engineered.
Civil Engineering | Land Planning | Environmental
1250 Wrights Lane, West Chester, PA 19380
Phone: (610) 918-9002 Fax: (610) 918-9003

COMMONWEALTH OF PENNSYLVANIA
REGISTERED PROFESSIONAL
DENNY L. HOWELL
ENGINEER
053098-E

REV.	DATE	DESCRIPTION
1		
2		
3		
4		
5		
6		
7		
8		

GRADING PERMIT
GRADING & UTILITIES PLAN

CLIENT: A ROSS MYERS
PROJECT: ALLAN MYERS EQUIPMENT MUSEUM
LOCATION: 1805 BERKS ROAD
WORCESTER TOWNSHIP, MONTGOMERY COUNTY, PA

DATE: 03/10/2025
SCALE: 1"=30'
DRAWN BY: NAR
CHECKED BY: JSR
PROJECT NO.: 4886
CAD FILE: 05 GRADING & UTILITIES PLAN.dwg
PLOTTED: 03/10/2025
DRAWING NO.: C04.1
SHEET 05 OF 18

Q:\CIVIL 3D JOBS\4886\4886 PRODUCTION PLANS\SHEET SET\SUBDIVISION & LD\05 GRADING & UTILITIES PLAN.DWG

COPYRIGHT 2021 D.L. HOWELL & ASSOCIATES, INC. – ALL RIGHTS RESERVED. THESE PLANS ARE THE PROPERTY OF D.L. HOWELL & ASSOCIATES, INC. ANY USE OR REPRODUCTION OF THESE PLANS IN WHOLE OR PART, WITHOUT THE WRITTEN PERMISSION OF D.L. HOWELL & ASSOCIATES, INC. IS FORBIDDEN.

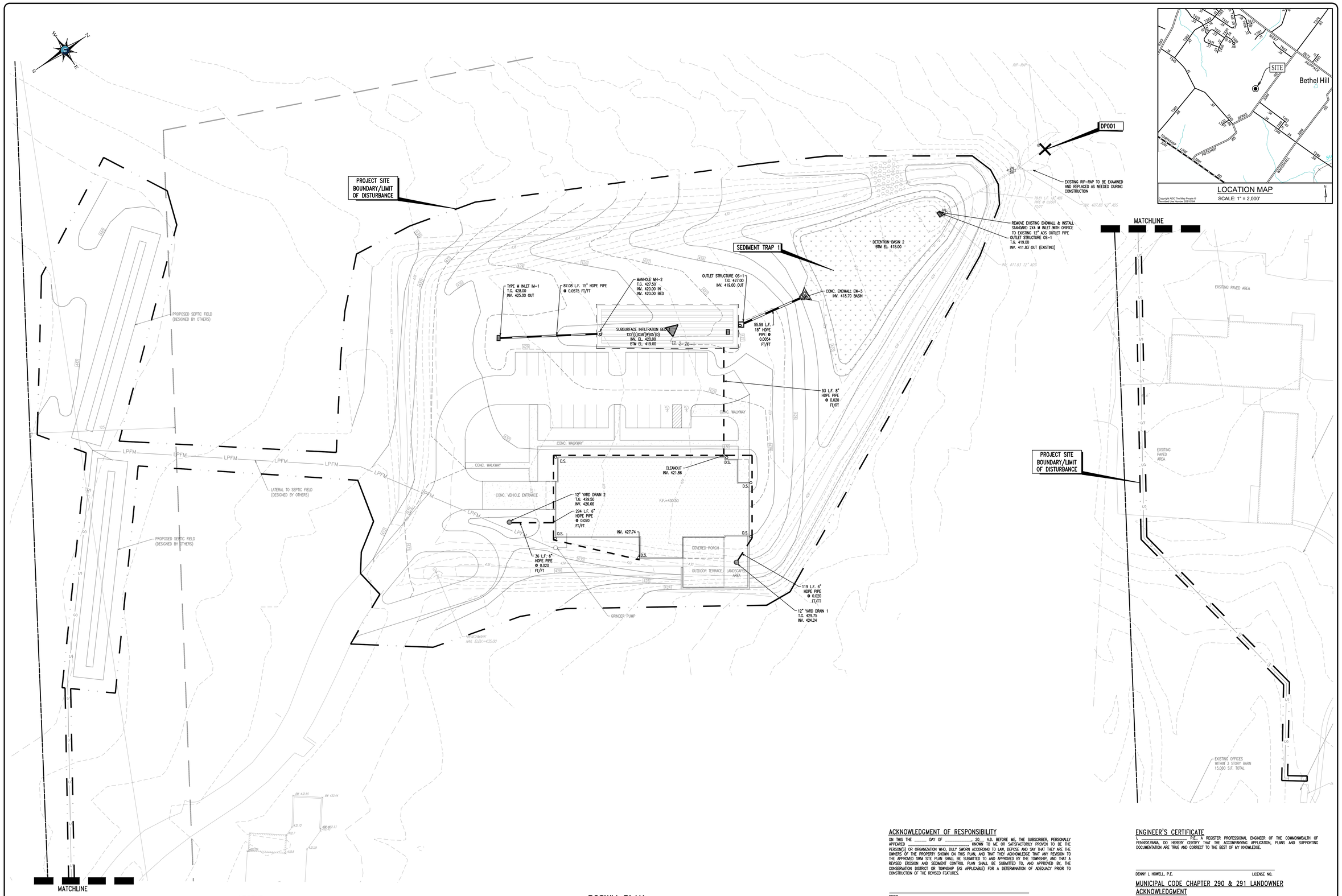

LEGEND

EX. PROPERTY LINE	242 EXISTING CONTOUR	PROP. LIGHT POLE	PROP. ELEC. LINE	PROP. STORM INLET	PROP. WATER LINE
PROP. PROPERTY LINE	242 PROPOSED CONTOUR	EX. FENCE	EX. UTILITY POLE	PROP. STORM INLET ID	PROP. WATER LATERAL
EX. RIGHT-OF-WAY	X 123.00 EXISTING SPOT ELEV.	MB EX. MAIL BOX	PROP. UTILITY POLE		PROP. FIRE WATER LINE
PROP. RIGHT-OF-WAY	X 123.00 NEW SPOT ELEV.	EX. SIGN	EX. GUY ANCHOR	PROP. SEEPAGE BED	W.V. PROP. WATER VALVE
EX. MONUMENT	GEB2 SOILS TYPE	PROP. SIGN	EX. GAS LINE		
PROP. MONUMENT	SOILS LINE	EXIST. PARKING SPACES	PROP. GAS LINE	EX. SANITARY SEWER LINE	EX. WATER VALVE
EX. REBAR	EX. CONC. CURB	PROP. PARKING SPACES	G.V. EX. GAS VALVE	PROP. SAN. SEWER LINE	F.H. PROP. HYDRANT
PROP. REBAR	PROP. CONC. CURB	(TBR) TO BE REMOVED	G.V. PROP. GAS VALVE	PROP. SAN. SEWER LATERAL	EX. HYDRANT
EX. EASEMENT	EX. EDGE OF PAVING	EX. TELE. LINE	EX. STORM SEWER LINE	PROP. SANITARY MH. ID	PROP. MANHOLE
PROP. EASEMENT	PROP. EDGE OF PAVING	PROP. TELE. LINE	PROP. STORM SEWER LINE		EX. PERC TEST
EX. WETLANDS	EX. LIGHT POLE	EX. ELEC. LINE	EX. STORM INLET	EX. WATER LINE	EX. TEST PIT

LIMIT OF DISTURBANCE/PROJECT SITE BOUNDARY

PCSWM PLAN

SCALE: 1"=30'

30 0 15 30 60

GRAPHIC SCALE
1 inch = 30 feet

ACKNOWLEDGMENT OF RESPONSIBILITY

ON THIS THE _____ DAY OF _____, 20__, A.D. BEFORE ME, THE SUBSCRIBER, PERSONALLY APPEARED _____, KNOWN TO ME OR SATISFACTORILY PROVEN TO BE THE PERSON(S) OR ORGANIZATION WHO, DULY SWORN ACCORDING TO LAW, DEPOSE AND SAY THAT THEY ARE THE OWNERS OF THE PROPERTY SHOWN ON THIS PLAN, AND THAT THEY ACKNOWLEDGE THAT ANY REVISION TO THE APPROVED SWM SITE PLAN SHALL BE SUBMITTED TO AND APPROVED BY THE TOWNSHIP, AND THAT A REVISED EROSION AND SEDIMENT CONTROL PLAN SHALL BE SUBMITTED TO, AND APPROVED BY, THE CONSERVATION DISTRICT OR TOWNSHIP (AS APPLICABLE) FOR A DETERMINATION OF ADEQUACY PRIOR TO CONSTRUCTION OF THE REVISED FEATURES.

_____
PRINT

_____
SIGNATURE

_____
NOTARY PUBLIC

COUNTY:

MY COMMISSION EXPIRES:

ENGINEER'S CERTIFICATE

I, _____, P.E., A REGISTER PROFESSIONAL ENGINEER OF THE COMMONWEALTH OF PENNSYLVANIA, DO HEREBY CERTIFY THAT THE ACCOMPANYING APPLICATION, PLANS AND SUPPORTING DOCUMENTATION ARE TRUE AND CORRECT TO THE BEST OF MY KNOWLEDGE.

_____
DENNY L HOWELL, P.E. LICENSE NO.

MUNICIPAL CODE CHAPTER 290 & 291 LANDOWNER ACKNOWLEDGMENT

I HEREBY CERTIFY THAT ANY REVISION TO THE APPROVED PLAN MUST BE APPROVED BY THE MUNICIPALITY OR CONSERVATION DISTRICT FOR APPROVAL, AND THE STORMWATER FACILITIES AND BMPS SHOWN HEREON ARE FIXTURES THAT CANNOT BE ALTERED OR REMOVED WITHOUT PRIOR APPROVAL BY THE MUNICIPALITY.

_____
LANDOWNER

UPI#: 670003454007

HOWELL ENGINEERING
Local Knowhow. Engineered.
Civil Engineering | Land Planning | Environmental
1250 Wrights Lane, West Chester, PA 19380
Phone: (610) 918-9002 Fax: (610) 918-9003

COMMONWEALTH OF PENNSYLVANIA
REGISTERED PROFESSIONAL ENGINEER
DENNY L. HOWELL
ENGINEER
055306-E

REV.	DATE	DESCRIPTION
1		
2		
3		
4		
5		
6		
7		
8		

GRADING PERMIT
PCSWM PLAN

CLIENT: A ROSS MYERS
PROJECT: ALLAN MYERS EQUIPMENT MUSEUM
LOCATION: 1805 BERKS ROAD
WORCESTER TOWNSHIP, MONTGOMERY COUNTY, PA

DATE:	03/10/2025
SCALE:	1"=30'
DRAWN BY:	NAR
CHECKED BY:	JSR
PROJECT NO.:	4886
CAD FILE:	08 PCSWM PLAN.dwg
PLOTTED:	03/10/2025
DRAWING NO.:	C05.1
SHEET	06 OF 18

COPYRIGHT 2021 D.L. HOWELL & ASSOCIATES, INC. - ALL RIGHTS RESERVED. THESE PLANS ARE THE PROPERTY OF D.L. HOWELL & ASSOCIATES, INC. ANY USE OR REPRODUCTION OF THESE PLANS IN WHOLE OR PART, WITHOUT THE WRITTEN PERMISSION OF D.L. HOWELL & ASSOCIATES, INC. IS FORBIDDEN.

PCSM PLANNING DESIGN NOTE: – 102.8(b)

THE STORMWATER MANAGEMENT SYSTEMS HAVE BEEN DESIGNED TO MAXIMIZE BEST MANAGEMENT PRACTICE (BMP) TECHNOLOGIES AND MINIMIZE POINT SOURCE DISCHARGES. THIS PLAN WILL FURTHER ACT TO PERFORM/PROVIDE THE FOLLOWING:

- PRESERVE THE INTEGRITY OF STREAM CHANNELS AND MAINTAIN AND PROTECT THE PHYSICAL, BIOLOGICAL AND CHEMICAL QUALITIES OF THE RECEIVING STREAM
- PREVENT AN INCREASE IN THE RATE OF STORMWATER RUNOFF
- MINIMIZE ANY INCREASE IN STORMWATER RUNOFF VOLUME
- MAXIMIZE THE PROTECTION OF EXISTING DRAINAGE FEATURES AND EXISTING VEGETATION
- MINIMIZE LAND CLEARING AND GRADING
- MINIMIZE SOIL COMPACTION
- UTILIZE OTHER STRUCTURAL (BASINS, WATER QUALITY BASINS, AND WATER QUALITY INLETS) OR NONSTRUCTURAL BMPS THAT PREVENT OR MINIMIZE CHANGES IN STORMWATER RUNOFF

PROJECT WASTE NOTE: – 102.8(f)(11)

THE OPERATOR SHALL REMOVE FROM THE SITE, RECYCLE, OR DISPOSE OF ALL BUILDING MATERIAL AND WASTES IN ACCORDANCE WITH THE DEPARTMENT'S SOLID WASTE MANAGEMENT REGULATIONS AT 25 PA. CODE 260.1 ET SEQ., 271.1 ET SEQ., AND 287.1 ET SEQ.
ADDITIONALLY, ANY AND ALL WASTE GENERATED DURING ROUTINE MAINTENANCE OF POST CONSTRUCTION STORMWATER MANAGEMENT BMPS SHALL BE DISPOSED OF APPROPRIATELY. THIS WASTE INCLUDES BUT IS NOT LIMITED TO GRASS CLIPPINGS, LANDSCAPING MAINTENANCE WASTE, AS WELL AS ANY TRASH OR REFUSE REMOVED FROM INLETS, BMPS, ETC. THESE MATERIALS SHALL BE HANDLED IN ACCORDANCE WITH THE DEPARTMENT'S SOLID WASTE MANAGEMENT REGULATIONS LISTED ABOVE AND LOCAL REGULATIONS.
THE CONTRACTOR SHALL NOT ILLEGALLY BURY, DUMP, OR DISCHARGE ANY BUILDING MATERIAL OR WASTES AT THE SITE.

BMP PROTECTION NOTE: – 102.8(f)(7)

SITE CONTRACTOR SHALL PROVIDE PROTECTION FOR BMPS UNTIL DRAINAGE AREA IS COMPLETELY STABILIZED.

GEOLOGIC FORMATION NOTE: – 102.8(f)(12)

LOCATION OF GEOLOGIC FORMATIONS TAKEN FROM THE PENNSYLVANIA DEPARTMENT OF CONSERVATION AND NATURAL RESOURCES' PAGEODE INTERACTIVE MAP. BASED ON THIS MAP, THE SITE IS LOCATED WITHIN JURASSIC AND TRIASSIC (JTrB).

NO KNOWN GEOLOGIC FORMATIONS THAT WOULD NEGATIVELY IMPACT SITE DEVELOPMENT (i.e. SINKHOLES, FAULTS, FRACTURES, KARST).

THE PENNSYLVANIA TITLE 25, CHAPTER 93 CLASSIFICATION FOR THE RECEIVING WATERS OF THE COMMONWEALTH – 102.8(f)(5)

* THE PENNSYLVANIA TITLE 25, CHAPTER 93 CLASSIFICATION

FOR THE RECEIVING WATERS OF THE COMMONWEALTH
UNT TO ZACHARIAS CREEK IN SKIPPACK CREEK WATERSHED: A TROUT-STOCKING (TSF) AND MIGRATORY FISHES (MF) WATER COURSE

THERMAL IMPACTS NOTE: – 102.4(b)(5)(xiii)

THE APPLICANT HAS BEEN ABLE TO DEMONSTRATE COMPLIANCE WITH CG-1. THE APPLICANT HAS PROPOSED AN BIOFILTRATION BASIN W/ MRC TO HANDLE THE TOTAL OF THE NET 2-YEAR CHANGE IN VOLUME CALCULATED BY WORKSHEET 4. THIS OF STORMWATER WILL PREVENT ANY DETRIMENTAL THERMAL IMPACTS FROM OCCURRING. ADDITIONAL COOLING IS PROVIDED THROUGH DISCHARGE TO WELL VEGETATED AREAS PRIOR TO REACHING THE SURFACE WATERS.

BMP IMPLEMENTATION/INSTALLATION/CRITICAL STAGE OVERSIGHT AND AS-BUILT PLAN REQUIREMENTS:

– 102.8(f)(7)
OVERSIGHT
THE APPLICANT/PERMITTEE SHALL PROVIDE ENGINEERING CONSTRUCTION OVERSIGHT FOR THE PROPOSED STORMWATER BEST MANAGEMENT PRACTICES (BMP'S). ADDITIONAL SOIL TESTING MAY BE REQUIRED PRIOR TO THE INSTALLATION OF BMP'S TO ENSURE PROPER LOCATION AND FUNCTION AT THE DISCRETION OF THE MCCD AND/OR TOWNSHIP. A LICENSED PROFESSIONAL ENGINEER KNOWLEDGEABLE IN THE DESIGN AND CONSTRUCTION OF STORMWATER BMP'S, PREFERABLY THE DESIGN ENGINEER, SHALL CONDUCT THE OVERSIGHT. OVERSIGHT SHALL INCLUDE THE FOLLOW CRITICAL STAGES OF BMP IMPLEMENTATION:

CRITICAL STAGES

- CONSTRUCTION OF SEDIMENT TRAP 1
- CONVERSION OF SEDIMENT TRAP 1 TO BIORETENTION BASIN
- INSTALLATION OF LANDSCAPING

AS-BUILT PLANS
REGARDLESS OF OWNERSHIP, THE APPLICANT/PERMITTEE SHALL SUBMIT TO THE TOWNSHIP AN ACTUAL AS-BUILT PLAN FOR THE STORMWATER MANAGEMENT FACILITIES REQUIRED PER THE APPROVED STORMWATER MANAGEMENT PLAN. THE AS-BUILT PLAN SHALL SHOW ALL FINAL DESIGN SPECIFICATIONS FOR ALL PERMANENT STORMWATER MANAGEMENT FACILITIES AND SHALL BE BASED ON AN ACTUAL FIELD SURVEY PERFORMED BY THE SURVEYOR OF RECORD. THE SURVEYOR SHALL CERTIFY AS TO THE ACCURACY OF THE AS-BUILT DATA. IN ADDITION TO THE SURVEYOR'S CERTIFICATION, THE AS-BUILT PLAN SHALL CONTAIN A STATEMENT SIGNED AND SEALED BY THE ENGINEER OF RECORD INDICATING THAT THE BMP'S WERE INSTALLED PER THE APPROVED STORMWATER MANAGEMENT DESIGN.

THE AS-BUILT PLAN FOR THE STORMWATER MANAGEMENT FACILITIES SHALL BE SUBMITTED TO THE TOWNSHIP WITHIN SIX MONTHS OF THE COMPLETION OF THE PROJECT (OR INDIVIDUAL PHASE OF THE PROJECT) FOR REVIEW AND FINAL INSPECTION BY THE MUNICIPAL ENGINEER.

AS-BUILT PLANS FOR THE STORMWATER BMP'S SHALL BE SUBMITTED TO THE CONSERVATION DISTRICT WITHIN SIX MONTHS FOLLOWING THE COMPLETION OF THE PROJECT (OR INDIVIDUAL PHASE) TO ALLOW FOR NOTICE OF TERMINATION (NOT) PROCESSING.

NOTICE OF TERMINATION & FINANCIAL SECURITY

A NOTICE OF TERMINATION (NOT) WILL BE REQUIRED TO BE SUBMITTED FOLLOWING THE APPROVAL OF THE FINAL AS-BUILT PLANS (SEE POST CONSTRUCTION STORMWATER FACILITIES OPERATIONS AND MAINTENANCE PROCEDURES – THIS PLAN)

ANY PERFORMANCE AND/OR FINANCIAL SECURITIES ESTABLISHED FOR THE PROJECT SHALL INCLUDE REQUIREMENTS FOR SUBMITTAL OF 'AS-BUILT' PLANS AND ENGINEERING CONSTRUCTION OVERSIGHT.

NPDES NOTE:

THE STORMWATER MANAGEMENT SYSTEMS HAVE BEEN DESIGNED TO MAXIMIZE BEST MANAGEMENT PRACTICE (BMP) TECHNOLOGIES MINIMIZES POINT SOURCE DISCHARGES AND PRESERVES THE INTEGRITY OF THE STREAM CHANNELS AND EXISTING ON-SITE VEGETATION. THIS HAS BEEN ACCOMPLISHED BY MINIMIZING IMPERVIOUS AREAS, MAXIMIZING PROTECTION OF EXISTING DRAINAGE FEATURES AND VEGETATION, MINIMIZING LAND CLEARING, GRADING, SOIL COMPACTION, AND UTILIZATION OF OTHER STRUCTURE OR NON-STRUCTURAL BMPS. THE OBJECTIVE OF THE STORMWATER DESIGN WAS TO DEVELOP SITE-SPECIFIC STORMWATER MANAGEMENT STRUCTURES TO PREVENT AN INCREASE IN THE RATE OF STORMWATER RUNOFF, AND MINIMIZE ANY INCREASE IN STORMWATER RUNOFF VOLUME PER PADEP NPDES PHASE II REQUIREMENTS.

BMP GENERAL NOTE:

UNTIL THE SITE IS STABILIZED, ALL EROSION AND SEDIMENTATION BMP'S MUST BE MAINTAINED PROPERLY. MAINTENANCE MUST INCLUDE INSPECTIONS OF ALL EROSION AND SEDIMENTATION BMP'S AFTER EACH RUNOFF EVENT AND ON A WEEKLY BASIS. ALL SITE INSPECTIONS WILL BE DOCUMENTED IN AN INSPECTION LOG KEPT FOR THIS PURPOSE. THE COMPLIANCE ACTIONS AND THE DATE, TIME AND NAME OF THE PERSON CONDUCTING THE INSPECTION SHALL BE ENTERED INTO THE LOG. THE INSPECTION LOG WILL BE KEPT ON SITE AT ALL TIMES AND MADE AVAILABLE TO THE DISTRICT UPON REQUEST. ALL PREVENTATIVE AND REMEDIAL MAINTENANCE WORK, INCLUDING CLEAN OUT, REPAIR, REPLACEMENT, REGRADING, REMULCHING, RESEEDING, AND RENETTING MUST BE PERFORMED IMMEDIATELY. IF EROSION AND SEDIMENTATION BMP'S FAIL TO PERFORM AS EXPECTED, REPLACEMENT BMP'S OR MODIFICATIONS OF THOSE INSTALLED WILL BE NEEDED. WHERE BMP'S ARE FOUND TO FAIL TO ALLEVIATE EROSION OR SEDIMENTATION POLLUTION, THE PERMITTEE OR CO-PERMITTEE SHALL INCLUDE THE FOLLOWING INFORMATION:

A. THE LOCATION AND SEVERITY OF THE BMP'S FAILURE AND ANY POLLUTION EVENTS.

B. ALL STEPS TAKEN TO REDUCE, ELIMINATE AND PREVENT THE RECURRENCE OF THE NON-COMPLIANCE.

C. THE TIME FRAME TO CORRECT THE NON-COMPLIANCE, INCLUDING THE EXACT DATES WHEN THE ACTIVITY WILL RETURN TO COMPLIANCE.

GEOLOGIC FORMATION NOTE:

BEDROCK GEOLOGY					
MAP S YMBOL	NAME	AGE	LITH1	LITH2	LITH3
Trl	Lockatong Formation	Triassic	Argillite	Black Shale	Limestone; calcareous shale

LOCATION OF GEOLOGIC FORMATIONS TAKEN FROM PENNSYLVANIA DEP eMapPA, "BEDROCK GEOLOGY" DEVELOPED BY THE PENNSYLVANIA DEPARTMENT OF ENVIRONMENTAL PROTECTION, GEOSPATIAL DATA CENTER, DATED: DECEMBER 2004.

LONG TERM OPERATION AND MAINTENANCE SCHEDULE: 102.8(f)(10)

POST CONSTRUCTION STORMWATER FACILITIES OPERATION AND MAINTENANCE PROCEDURES:

WITHIN THREE (3) MONTHS OF THE APPLICATION FOR NOTICE OF TERMINATION OF THE NPDES PERMIT FOR STORMWATER DISCHARGES ASSOCIATED WITH CONSTRUCTION ACTIVITIES TO THE DEPARTMENT OF ENVIRONMENTAL PROTECTION, THE PROPERTY OWNER SHALL ASSUME RESPONSIBILITY FOR STORMWATER RELATED DISCHARGES FROM THE SITE. SUBSEQUENTLY ALL INSPECTIONS AND ANY MAINTENANCE REQUIRED FOR THE CONTINUED OPERATION OF POST CONSTRUCTION STORMWATER MANAGEMENT BMP'S SHALL BE THE RESPONSIBILITY OF THE PROPERTY OWNER. INSPECTIONS SHALL BE COMPLETED FOR EACH INSPECTION PERIOD INDICATED AND FILED PROMPTLY WITH THE TOWNSHIP MS4 ADMINISTRATOR. ALL INSPECTIONS SHALL BE IN ACCORDANCE WITH THE OPERATIONS AND MAINTENANCE AGREEMENT.

THE OPERATION AND MAINTENANCE REQUIREMENTS FOR THE POST CONSTRUCTION STORMWATER MANAGEMENT BMP'S FOR THIS PROJECT INCLUDE THE FOLLOWING:

1. RAIN GARDEN/BIORETENTION

INSPECTION:
RAIN GARDENS/BIORETENTION SHALL BE INSPECTED QUARTERLY AND AFTER MAJOR RAINFALL EVENTS (ANY EVENT GREATER THAN 2 INCHES OF RAINFALL WITHIN 24 HOURS) FOR THE FIRST TWO (2) YEARS AND THEN TWICE YEARLY AFTER THAT. INSPECTION ITEMS SHALL INCLUDE THE CONDITION OF THE EMBANKMENT, SPILLWAY, OUTLET STRUCTURE AND ORIFICE AS WELL AS THE OCCURRENCE OF STANDING WATER AND UNDESIRABLE VEGETATION. RUNOFF FROM ALL STORM EVENTS SHOULD DEWATER WITHIN 48 HOURS.

MAINTENANCE:
DO NOT ACCESS THE INTERIOR SURFACE WITH EQUIPMENT UNLESS IT IS COMPLETELY DRY – USE ONLY LOW GROUND PRESSURE (3 TO 5 POUNDS PER SQUARE INCH) BEARING VEHICLES. OUTLET STRUCTURES AND ORIFICES SHALL BE CLEARED IMMEDIATELY OF ALL DEBRIS TO ASSURE THE PROPER OPERATION OF THE OUTLET CONTROLS. PATCH CONCRETE DAMAGE AS NECESSARY. ELIMINATE ANY UNDESIRABLE WOODY VEGETATION FROM EMBANKMENTS WITHOUT DAMAGE TO THE EMBANKMENT. CHECK FOR AND REPAIR DAMAGE FROM BURROWING ANIMALS IN ALL BASIN AREAS. IF SYSTEM FAILS TO DEWATER WITHIN 48 HOURS CONSULT THE TOWNSHIP AND THE ENGINEER OF RECORD FOR APPROPRIATE MEASURES. REGRADE AND REPLANT AREAS WHICH HAVE SETTLED AND HAVE STANDING POOLS OF WATER. STABILIZE WITH SEED AND MULCH TO ORIGINAL SPECIFICATIONS. IF BASIN BOTTOM FAILS TO DRAIN FREELY, REMOVE SEDIMENT AND TILL LIGHTLY, THEN REPLANT. MAINTENANCE PROCEDURES ASSOCIATED WITH THE BASIN BOTTOMS SHALL BE AS FOLLOWS:

CONTROL WEEDY GROWTH, BY MOWING WITH A FLAIL OR ROTARY TYPE MOWER TO A HEIGHT OF 6" APPROXIMATELY ONCE A MONTH OR WHENEVER GROWTH REACHES 10"-14". THE VEGETATION IS TO BE CHOPPED UP FINELY ENOUGH SO THAT IT WILL NOT SMOTHER AND SHADE OUT THE DESIRED SEEDLINGS.

IN ORDER TO CONTROL INVASIVE SPECIES THE SEEDLINGS ARE TO BE INSPECTED TWICE A SEASON BY AN INDIVIDUAL THAT IS ABLE TO DISTINGUISH BETWEEN DESIRABLE AND UNDESIRABLE SPECIES. ANY UNDESIRABLE SPECIES ARE TO BE TREATED WITH THE HERBICIDE RODEO. THE HERBICIDE IS TO BE APPLIED BY A LICENSED APPLICATOR AND ACCORDING TO THE MANUFACTURER'S RECOMMENDATIONS. WICK APPLICATION OR OTHER METHOD OF SPOT SPECIFIC APPLICATION IS RECOMMENDED IN ORDER TO TARGET UNDESIRABLE SPECIES. HAND PULLING OF WEEDS IS NOT RECOMMENDED.

SUBSEQUENT YEARS:
MOW ANNUALLY IN MARCH WITH A ROTARY MOWER TO A HEIGHT OF 6 INCHES (NO LOWER)

IN ORDER TO CONTROL INVASIVE SPECIES THE SEEDING IS TO BE INSPECTED TWICE A SEASON BY AN INDIVIDUAL THAT IS ABLE TO DISTINGUISH BETWEEN DESIRABLE AND UNDESIRABLE SPECIES. ANY UNDESIRABLE SPECIES ARE TO BE TREATED WITH THE HERBICIDE RODEO. THE HERBICIDE IS TO BE APPLIED BY A LICENSED APPLICATOR AND ACCORDING TO THE MANUFACTURER'S RECOMMENDATIONS. WICK APPLICATION OR OTHER METHOD OF SPOT SPECIFIC APPLICATION IS RECOMMENDED TO TARGET UNDESIRABLE SPECIES. HAND PULLING OF WEEDS IS NOT RECOMMENDED.

2. INLETS

INSPECTION: STORMWATER INLETS SHALL BE INSPECTED QUARTERLY AND AFTER MAJOR RAINFALL EVENTS FOR THE FIRST TWO (TWO) YEARS AND AND THEN TWICE YEARLY AFTER THAT. CHECK FOR SEDIMENT DEPOSITION IN THE SUMP. THE ACCUMULATION OF SEDIMENT CAN BE DETERMINED BY PROBING WITH A MEASURING STICK. FOR WATER QUALITY INLETS (THOSE WITH A HOOD DEVICE INSTALLED), CHECK FOR PROPER STRUCTURE ALIGNMENT AND ATTACHMENT, AND BLOCKAGE OF THE ANTI-SIPHON TUBE.

MAINTENANCE: SEDIMENT SHALL BE REMOVED FROM THE SUMP WHEN IT HAS REACHED 6 INCHES IN DEPTH OR YEARLY WHICHEVER COMES FIRST. VACUME TRUCKS ARE THE RECOMMENDED REMOVAL METHOD. CLEAR THE DRAIN HOLES IN THE BOTTOM ODF THE INLET. REMOVED SEDIMENT SHALL BE DISPOSED OF IN ACCORDANCE WITH PENNSYLVANIA DEPARTMENT OF ENVIRONMENTAL PROTECTION REGULATIONS. IN WATER QUALITY INLETS, CLEAR THE ANTISIPHON TUBE AS NECESSARY AND RE-ATTACH OR RE-ALIGN THE HOOD UNIT IF IT HAS SHIFTED.

3. HEADWALLS & ENDWALLS

INSPECTION: HEADWALL & ENDWALL/ENDSECTIONS SHALL BE INSPECTED QUARTERLY AND AFTER MAJOR RAINFALL EVENTS FOR THE FIRST TWO (2) YEARS AND THEN TWICE YEARLY AFTER THAT. INSPECT THE CONDITION OF THE STRUCTURE IN TERMS OF CRACKING OR SPALLING, SHIFTING OR SETTLEMENT, EROSION OR DEPOSITION, AS WELL AS THE FOR BLOCKAGE AT INLETS AND THE CONDITION OF ROCK APRONS AT OUTFALLS. NOTE LOCATION, SIZE AND TYPE OF STRUCTURE AS WELL AS ID NUMBER. CHECK FOR DRY WEATHER FLOWS, AND NOTE ANY UNUSUAL COLOR OR ODOR.

MAINTENANCE: REMOVE SEDIMENT, VEGETATION AND DEBRIS AT THE INFLOW AND OUTFLOW POINTS AS NECESSARY TO INSURE THAT PIPES STAY FREE AND CLEAR OF OBSTRUCTIONS. REPAIR OR REPLACE STRUCTURE AS NECESSARY USING GROUT OR GASKETED BANDS AND PROPER BEDDING MATERIAL OR GEOTEXTILE. REPAIR ERODED AREAS WITH PROPERLY SIZED STONE AND GEOTEXTILE. CONTACT THE TOWNSHIP NPDES ADMINISTRATOR IMMEDIATELY IF DRY WEATHER FLOWS ARE OBSERVED.

GENERAL PCSM NOTES:

1. AN AREA SHALL BE CONSIDERED TO HAVE ACHIEVED FINAL STABILIZATION WHEN IT HAS A MINIMUM UNIFORM 70% PERENNIAL VEGETATIVE COVER OR OTHER PERMANENT NON-VEGETATIVE COVER WITH A DENSITY SUFFICIENT TO RESIST ACCELERATED SURFACE EROSION AND SUBSURFACE CHARACTERISTICS SUFFICIENT TO RESIST SLIDING AND OTHER MOVEMENTS. IMMEDIATELY AFTER EARTH DISTURBANCE ACTIVITIES CEASE, THE OPERATOR SHALL STABILIZE ANY AREAS DISTURBED BY THE ACTIVITIES. DURING NON-GERMINATING PERIODS, MULCH MUST BE APPLIED AT THE SPECIFIED RATES. DISTURBED AREAS WHICH ARE NOT AT FINISHED GRADE AND WHICH WILL BE RE-DISTURBED WITHIN 1 YEAR MUST BE STABILIZED IN ACCORDANCE WITH THE TEMPORARY VEGETATIVE STABILIZATION SPECIFICATIONS. DISTURBED AREAS WHICH ARE AT FINISHED GRADE OR WHICH WILL NOT BE RE-DISTURBED WITHIN 1 YEAR MUST BE STABILIZED IN ACCORDANCE WITH THE PERMANENT VEGETATIVE STABILIZATION SPECIFICATIONS.

   THE PERMITTEE OR CO-PERMITTEE SHALL BE RESPONSIBLE FOR LONG-TERM OPERATION AND MAINTENANCE OR REPLACEMENT OF PCSM BMPS UNLESS A DIFFERENT PERSON IS IDENTIFIED IN THE NOTICE OF TERMINATION AND HAS AGREED TO LONG-TERM OPERATION AND MAINTENANCE OF PCSM BMPS.

2. IF THE CONTRACTOR ENCOUNTERS HIGH WATER TABLE, SHALLOW BEDROCK, OR SOIL INSTABILITY DURING SITE CONSTRUCTION, THE DESIGN ENGINEER OR THE ON-SITE GEOTECHNICAL ENGINEER MUST BE CONTACTED IMMEDIATELY FOR CORRECTIVE MEASURES.

3. IF GROUNDWATER OR BEDROCK IS ENCOUNTERED DURING THE INSTALLATION OF THE BMP'S STOP WORK AND CONTACT THE TOWNSHIP AND DESIGN ENGINEER FOR AN ALTERNATE STORMWATER BMP LOCATION OR NEW DESIGN.

4. THE EROSION AND SEDIMENTATION CONTROL PLAN HAS BEEN DESIGNED IN AN EFFORT TO MINIMIZE THE EXTENT AND DURATION OF EARTH DISTURBANCE, WHILE PROTECTING THE EXISTING DRAINAGE FEATURES AND VEGETATION. THE E&S PLAN AND CONSTRUCTION SEQUENCE HAS BEEN DEVELOPED AS TO MINIMIZE SOIL COMPACTION, LAND CLEARING, AND IMPERVIOUS AREAS.

5. THE DESIGN WILL PRESERVE THE INTEGRITY OF STREAM CHANNELS AND MAINTAIN AND PROTECT THE PHYSICAL, BIOLOGICAL AND CHEMICAL QUALITIES OF SCIOTO CREEK.

6. THE OPERATOR SHALL REMOVE FROM THE SITE, RECYCLE, OR DISPOSE OF ALL BUILDING MATERIAL AND WASTES IN ACCORDANCE WITH THE DEPARTMENT'S SOLID WASTE MANAGEMENT REGULATIONS AT 25 PA. CODE 260.1 ET SEQ., 271.1 ET SEQ., AND 287.1 ET SEQ. THE CONTRACTOR SHALL NOT ILLEGALLY BURY, DUMP, OR DISCHARGE ANY BUILDING MATERIAL OR WASTES AT THE SITE.

7. THE PENNSYLVANIA TITLE 25, CHAPTER 93 CLASSIFICATION FOR THE RECEIVING WATERS OF THE COMMONWEALTH. UNNAMED TRIBUTARY OF SWAMP CREEK, TSF, TROUT-STOCKING FISH.

8. HOWELL HAS PROPOSED TO UTILIZE CONVEYANCE SWALES, INLETS AND CONVEYANCE PIPING TO COLLECT AND CONVEY THE STORMWATER RUNOFF INTO THE STORMWATER MANAGEMENT SYSTEM. THERMAL IMACTS WILL BE AVOIDED OR MINIMIZED BY ROUTING HEATED STORMWATER RUNOFF TO STORMWATER BASINS IN AN EFFORT TO PROMOTE COOLING PRIOR TO ENTERING SURFACE WATERS.

9. PCSM LONG TERM OPERATIONS AND MAINTENANCE REQUIREMENTS – UNTIL THE PERMITTEE OR CO-PERMITTEE HAS RECEIVED WRITTEN APPROVAL OF A NOTICE OF TERMINATION, THE PERMITTEE OR CO-PERMITTEE WILL REMAIN RESPONSIBLE FOR COMPLIANCE WITH THE PERMIT TERMS AND CONDITIONS INCLUDING LONG-TERM OPERATION AND MAINTENANCE OF ALL PCSM BMPS ON THE PROJECT SITE AND IS RESPONSIBLE FOR VIOLATIONS OCCURRING ON THE PROJECT SITE.

   THE PERMITTEE OR CO-PERMITTEE SHALL BE RESPONSIBLE FOR LONG-TERM OPERATION AND MAINTENANCE OF PCSM BMPS UNLESS A DIFFERENT PERSON IS IDENTIFIED IN THE NOTICE OF TERMINATION AND HAS AGREED TO LONG-TERM OPERATION AND MAINTENANCE OF PCSM BMPS.

   FOR ANY PROPERTY CONTAINING A PCSM BMP, THE PERMITTEE OR CO-PERMITTEE SHALL RECORD AN INSTRUMENT WITH THE RECORDER OF DEEDS WHICH WILL ASSURE DISCLOSURE OF THE PCSM BMP AND THE RELATED OBLIGATIONS IN THE ORDINARY COURSE OF A TITLE SEARCH OF THE SUBJECT PROPERTY. THE RECORDED INSTRUMENT MUST IDENTIFY THE PCSM BMP, PROVIDE FOR NECESSARY ACCESS RELATED TO LONG-TERM OPERATION AND MAINTENANCE FOR PCSM BMPS AND PROVIDE NOTICE THAT THE RESPONSIBILITY FOR LONG-TERM OPERATION AND MAINTENANCE OF THE PCSM BMP IS A COVENANT THAT RUNS WITH THE LAND THAT IS BINDING UPON AND ENFORCEABLE BY SUBSEQUENT GRANTEES, AND PROVIDE PROOF OF FILING WITH THE NOTICE OF TERMINATION UNDER § 102.7(B)(5) (RELATING TO PERMIT TERMINATION).

   THE PERSON RESPONSIBLE FOR PERFORMING LONG-TERM OPERATION AND MAINTENANCE MAY ENTER INTO AN AGREEMENT WITH ANOTHER PERSON INCLUDING A CONSERVATION DISTRICT, NONPROFIT ORGANIZATION, MUNICIPALITY, AUTHORITY, PRIVATE CORPORATION OR OTHER PERSON, TO TRANSFER THE RESPONSIBILITY FOR PCSM BMPS OR TO PERFORM LONG-TERM OPERATION AND MAINTENANCE AND PROVIDE NOTICE THEREOF TO THE DEPARTMENT OF ENVIRONMENTAL PROTECTION.

   A PERMITTEE OR CO-PERMITTEE THAT FAILS TO TRANSFER LONG-TERM OPERATION AND MAINTENANCE OF THE PCSM BMP OR OTHERWISE FAILS TO COMPLY WITH THIS REQUIREMENT SHALL REMAIN JOINTLY AND SEVERALLY RESPONSIBLE WITH THE LANDOWNER FOR LONG-TERM OPERATION AND MAINTENANCE OF THE PCSM BMPS LOCATED ON THE PROPERTY.

10. PCSM REPORTING AND RECORDKEEPING – THE PCSM PLAN, INSPECTION REPORTS AND MONITORING RECORDS SHALL BE AVAILABLE FOR REVIEW AND INSPECTION BY THE DEPARTMENT OF ENVIRONMENTAL PROTECTION OR THE CONSERVATION DISTRICT.

11. ANY PERFORMANCE AND/OR FINANCIAL SECURITIES ESTABLISHED FOR THE PROJECT SHALL INCLUDE REQUIREMENTS FOR SUBMITTAL OF 'AS-BUILT' PLANS AND ENGINEERING CONSTRUCTION OVERSIGHT.

12. THE PERMITTEE SHALL INCLUDE WITH THE NOTICE OF TERMINATION "RECORD DRAWINGS" WITH A FINAL CERTIFICATION STATEMENT FROM A LICENSED PROFESSIONAL, WHICH READS AS FOLLOWS:
    "I, ____________, DO HEREBY CERTIFY PURSUANT TO THE PENALTIES OF 18 PA.C.S.A. § 4904 TO THE BEST OF MY KNOWLEDGE, INFORMATION AND BELIEF, THAT THE ACCOMPANYING RECORD DRAWINGS ACCURATELY REFLECT THE AS-BUILT CONDITIONS, ARE TRUE AND CORRECT, AND ARE IN CONFORMANCE WITH CHAPTER 102 OF THE RULES AND REGULATIONS OF THE DEPARTMENT OF ENVIRONMENTAL PROTECTION OF ENVIRONMENTAL PROTECTION AND THAT THE PROJECT SITE WAS CONSTRUCTED IN ACCORDANCE WITH THE APPROVED PCSM PLAN, ALL APPROVED PLAN CHANGES AND ACCEPTED CONSTRUCTION PRACTICES."

13. UPON PERMANENT STABILIZATION OF THE EARTH DISTURBANCE ACTIVITY UNDER § 102.22(A)(2) (RELATING TO PERMANENT STABILIZATION), AND INSTALLATION OF BMPS IN ACCORDANCE WITH AN APPROVED PLAN PREPARED AND IMPLEMENTED IN ACCORDANCE WITH §§ 102.4 AND 102.8 (RELATING TO EROSION AND SEDIMENT CONTROL REQUIREMENTS; AND PCSM REQUIREMENTS), THE PERMITTEE OR CO-PERMITTEE SHALL SUBMIT A NOTICE OF TERMINATION TO THE DEPARTMENT OF ENVIRONMENTAL PROTECTION OR CONSERVATION DISTRICT.

    THE NOTICE OF TERMINATION (NOT) MUST INCLUDE:
    (1) THE FACILITY NAME, ADDRESS AND LOCATION.
    (2) THE OPERATOR NAME AND ADDRESS.
    (3) THE PERMIT NUMBER.
    (4) THE REASON FOR PERMIT TERMINATION.
    (5) IDENTIFICATION OF THE PERSONS WHO HAVE AGREED TO AND WILL BE RESPONSIBLE FOR LONG-TERM OPERATION AND MAINTENANCE OF THE PCSM BMPS IN ACCORDANCE WITH §102.8(M) AND PROOF OF COMPLIANCE WITH § 102.8(M)(2).

    PRIOR TO ACCEPTING THE NOT, THE DEPARTMENT OF ENVIRONMENTAL PROTECTION AND/OR CONSERVATION DISTRICT STAFF WILL PERFORM A FINAL INSPECTION AND APPROVE OR DENY THE NOTICE OF TERMINATION.

14. UNDERDRAINS AND/OR PAVEMENT BASE DRAINS SHALL BE PROVIDED IN AREAS DEEMED NECESSARY BY THE MUNICIPAL ENGINEER AS MAY BE ENCOUNTERED DURING CONSTRUCTION.

15. PRIOR TO DEDICATION OF PUBLIC STREETS AND RELEASE OF THE MAINTENANCE BOND, A VIDEO INSPECTION OF ALL COLLECTION AND CONVEYANCE SYSTEMS LOCATED WITHIN THE STREET RIGHT-OF-WAY SHALL BE REQUIRED USING METHODS ACCEPTABLE TO THE MUNICIPAL ENGINEER. A RECORD OF THE VIDEO INSPECTION SHALL BE PROVIDED IN AN ELECTRONIC FORMAT ACCEPTABLE TO THE MUNICIPAL ENGINEER. DEPENDING ON THE RESULTS, ALL PIPES AND INLETS SHALL BE CLEANED AND/OR RESTORED, REPAIRED OR REPLACED, ETC., PER ORIGINAL DESIGN SPECIFICATIONS.

16. ALL OUTLET STRUCTURE CONNECTIONS SHALL BE WATERTIGHT.

SOIL USE LIMITATIONS AND RESOLUTIONS:

1. CUTBANKS CAVE

SOILS SUBJECT TO CUT BANKS & CAVE: APPROPRIATE PRECAUTIONS SHOULD BE TAKEN TO SAFEGUARD WORKERS DURING ALL TRENCHING AND EXCAVATION OPERATIONS. ALL APPLICABLE OSHA STANDARDS AND REGULATIONS MUST BE IMPLEMENTED AT ALL TIMES. THE CONTRACTOR TO UTILIZE TRENCH BOXES FOR ALL UTILITY PIPING INSTALLATIONS.

2. CORROSIVE TO CONCRETE/STEEL

SUITABLE PRECAUTIONS SHOULD BE TAKEN TO PROTECT ALL UNDERGROUND PIPES, CONDUITS, AND STORAGE TANKS. THE CONTRACTOR TO USE EPDXY COATED STEEL AND REBAR FOR ALL SUBSURFACE INSTALLATIONS. FOR BELOW GRADE CONCRETE INSTALLATIONS, THE CONTRACTOR TO, AT MINIMUM, APPLY BITUMINOUS COATING TO ALL SUBSURFACE CONCRETE OR APPLY ADHESIVE BARRIER (I.E., RUBBER MEMBRANE, ETC.) AS WARRANTED BY ACTUAL SOIL CONDITIONS.

3. DROUGHTY SOILS

SOILS SUSCEPTIBLE TO DROUGHTY CONDITIONS SHALL BE MONITORED DURING CONSTRUCTION AND PROPER DUST CONTROLS SHALL BE IMPLEMENTED DURING DRY CONDITIONS.

4. EASILY ERODIBLE

TYPES EXHIBITING K VALUES GREATER THAN 0.36 OR PLASTICITY INDEX VALUES LOWER THAN 10, LIMIT VEGETATIVE STABILIZATION OF CHANNELS. RESOLUTIONS: TEMPORARY CHANNEL LINING, PROVIDING PERMANENT CHANNEL LINING, DECREASING CHANNEL GRADE, INCREASING CHANNEL WIDTH, SELECTION VEGETATIVE WITH GREATER RETARDANCE, SELECTING PERMANENT LININGS OTHER THAN GRASSES, AND IMPLEMENTING COMBINATION OF THESE AND OTHER METHODS.

5. DEPTH TO SATURATED ZONE/SEASONAL HIGH WATER TABLE

SITE CONSTRUCTION/EARTHMOVING IS RECOMMENDED TO OCCUR IN SUMMER OR FALL SPRING CONSTRUCTION SHOULD BE AVOIDED WHERE POSSIBLE. UNLESS ON-SITE DATA INDICATES OTHERWISE, IT SHOULD BE ASSUMED THAT EXCAVATIONS INTO THESE SOILS WILL ENCOUNTER WATER AND APPROPRIATE MEANS SHOULD BE PROVIDED TO HANDLE THAT WATER. UNANTICIPATED SPRINGS AND SEEPS INTERCEPTED DURING EXCAVATION OF BASINS OR TRAPS SHOULD BE SAFELY CONVEYED AROUND THE BASIN TO A SUITABLE DOWN GRADIENT DISCHARGE POINT. CONTRACTOR MAY ALSO INSTALL PERFORATED UNDERDRAIN TO PROTECT BELOW-GRADE INSTALLATIONS AS MAY BE RECOMMENDED BY DESIGN ENGINEER, PADEP, OR COUNTY CONSERVATION DISTRICT. WATER TO BE PUMPED TO A DEWATERING STRUCTURE, SEE DETAIL ALL PROPOSED SUMP PUMP DISCHARGES SHALL DISCHARGE TO A WELL VEGETATED AREA TO ALLOW FOR MAXIMUM INFILTRATINO PRIOR TO ENTERING STORMWATER MANAGEMENT FACILITIES.

6. LOW STRENGTH/LANDSLIDE PRONE

PRECAUTIONS SHOULD BE TAKEN TO PREVENT SLOPE FAILURES DUE TO IMPROPER CONSTRUCTION PRACTICES SUCH AS OVER-STEEPENING AND OVERLOADING OF SLOPES, REMOVAL OF LATERAL SUPPORT, AND FAILURE TO PREVENT SATURATION OF SLOPES. SETBACKS SHOULD COMPLY WITH THE STANDARDS IN CHAPTER 16 OF THE MARCH 2012 EROSION CONTROL MANUAL UNLESS IT CAN BE SHOWN THAT PROPOSED CUTS AND FILLS DO NOT POSE A HAZARD TO PUBLIC SAFETY OR TO SURFACE WATERS. ALSO, ROAD FILL MATERIAL WILL LIKELY NEED TO BE IMPORTED IN AREAS WHERE SOILS HAVE LOW STRENGTH

7. SLOW PERCOLATION

PROPOSED IN THESE AREAS SHALL BE MINIMIZED WITHOUT ADEQUATE SOILS TESTING

8. PIPING

THE CONTRACTOR SHALL INSTALL ANTI-SEEP COLLARS OR TRENCH PLUGS AS RECOMMENDED BY DESIGN ENGINEER, PADEP, OR COUNTY CONSERVATION DISTRICT AND SEAL ALL PIPE JOINTS WATERTIGHT.

9. POOR SOURCE OF TOPSOIL

IDENTIFYING AND RESOLVING CHARACTERISTICS, THAT RENDER SOIL TYPES POORLY SUITED AS TOPSOIL. SOIL SHOULD BE IMPORTED FROM OTHER AREAS ON SITE. THE MONTGOMERY COUNTY CONSERVATION DISTRICT MUST APPROVE ANY DEVIATION FROM THE E&SC SEQUENCE.

10. FROST ACTION

ADEQUATE COMPACTION OF SOIL IS REQUIRED FOR THE EMBANKMENTS, PIPE BACKFILL, ROAD CONSTRUCTION AND THE BUILDING PADS. IF ADEQUATE COMPACTION CANNOT BE ACHIEVED DUE TO FROST ACTION OR WET SOIL TYPE, EITHER SOIL SHOULD BE IMPORTED FROM OTHER AREAS ON SITE OR CONSTRUCTION OF THESE FACILITIES SHOULD NOT BE WORKED ON DURING PERIODS PRONE TO FROST. THE MONTGOMERY COUNTY CONSERVATION DISTRICT MUST APPROVE ANY DEVIATION FROM THE E&SC SEQUENCE.

11. WETNESS/PONDING

TO RESOLVE THIS LIMITATION VEGETATIVE SPECIES THAT ARE TOLERANT TO WET CONDITIONS SHOULD BE SELECTED FOR LANDSCAPING.

12. HYDRIC/HYDRIC INCLUSIONS

SITE CONSTRUCTION/EARTHMOVING IS RECOMMENDED TO OCCUR IN SUMMER OR FALL. SPRING CONSTRUCTION SHOULD BE AVOIDED WHERE POSSIBLE UNLESS ON-SITE DATA INDICATES OTHERWISE, IT SHOULD BE ASSUMED THAT EXCAVATIONS INTO THESE SOILS WILL ENCOUNTER WATER AND APPROPRIATE MEANS SHOULD BE PROVIDED TO HANDLE THAT WATER. CONTRACTOR MAY ALSO INSTALL PERFORATED UNDERDRAIN TO PROTECT BELOW-GRADE INSTALLATIONS AS MAY BE RECOMMENDED BY DESIGN ENGINEER, PADEP, OR COUNTY CONSERVATION DISTRICT. WATER TO BE PUMPED TO A DEWATERING STRUCTURE, SEE DETAIL ALL PROPOSED SUMP PUMP DISCHARGES SHALL DISCHARGE TO A WELL VEGETATED AREA TO ALLOW FOR MAXIMUM PRIOR TO ENTERING STORMWATER MANAGEMENT FACILITIES.

BMP FAILURE DEFINED (PROTOCOL 2 DEP BMP MANUAL):

BMP 6.4.10 RAINGARDEN/BIORETENTION W/ MRC	FAILURE OF THE RAINGARDEN/BIORETENTION BASIN W/ MRC OCCURS WHEN THE WATER LEVEL WITHIN THE BASIN DOES NOT DRAW DOWN WITHIN 3 DAYS AFTER THE 24-HOUR STORM EVENT TO THE TOP OF THE SOIL AMENDMENTS WITHIN THE BASIN. THIS CONDITION WOULD INDICATE THAT THE ORIFICE IS CLOGGED AND NEEDS TO BE CLEANED OF DEBRIS.

PRIMARY CAUSES OF FAILURE INCLUDE SOIL COMPACTION/ SMEARING WHICH LEADS TO POOR RATES, LACK OF PROPER STABILIZATION PRIOR TO BMP INSTALLATION WHICH LEADS TO SEDIMENTATION; LACK OF PRETREATMENT LEADING TO SEDIMENTATION, AND LACK OF PROPER BMP MAINTENANCE.

SHOULD ANY OF THE ABOVE CONDITIONS BE OBSERVED, THE DESIGN ENGINEER AND TOWNSHIP ENGINEER SHOULD BE CONTACTED TO IMPLEMENT CORRECTIVE ACTIONS.

BMP/SOILS RESOLUTIONS:

IF, AT ANY TIME, EVIDENCE OF AN BMP'S INABILITY TO INFILTRATE THE REQUIRED STORMWATER VOLUME IS OBSERVED, DOCUMENTED AND CONFIRMED. THE OWNER OF THE FACILITY SHALL TAKE APPROPRIATE MEASURES NECESSARY TO REHABILITATE THE SURFACE TO A CONDITION WHICH WILL ALLOW THE BASIN TO FUNCTION AS ORIGINALLY INTENDED (POTENTIAL REHABILITATION TECHNIQUES INCLUDE BUT ARE NOT LIMITED TO TILLING OF THE SOIL, REMOVAL AND REPLACEMENT OF EXISTING SOIL WITH AMENDED SOILS, INSTALLATION OF STONE TRENCHES OR INFILTRATING DEVICES BELOW THE SURFACE OF THE BASIN). SHOULD THE BMP'S CONTINUALLY FAIL TO INFILTRATE PER THE INTENDED DESIGN, THEN THE ENGINEER OF RECORD SHALL BE CONTACTED. THE ENGINEER OF RECORD SHALL MEET WITH THE TOWNSHIP ENGINEER TO DISCUSS IMPLEMENTING POSSIBLE SOLUTIONS. THE OWNER OF THE FACILITY WILL BE REQUIRED TO SUBMIT PLANS AND/OR CALCULATIONS DETAILING THE AGREED UPON DESIGN SOLUTIONS.

BMP 6.7.2 LANDSCAPE RESTORATION

THE INSTALLATION OF THIS BMP IS A CRITICAL STAGE WHERE THE DESIGN ENGINEER MUST BE CONTACTED AT LEAST 48 HOURS IN ADVANCE TO PROVIDE CONSTRUCTION OVERSIGHT.

CONSTRUCTION SEQUENCE

MEADOW INSTALLATION

1. ALL WEEDS OR EXISTING VEGETATION MUST BE ELIMINATED PRIOR TO SEEDING.
2. PERENNIAL WEEDS MAY REQUIRE YEAR LONG SMOTHERING, REPEATED SPRAYINGS WITH HERBICIDES, OR REPEATED TILLAGE WITH EQUIPMENT THAT CAN UPROOT AND KILL PERENNIAL WEEDS.
3. PLANTING CAN TAKE PLACE FROM SPRING THAW THROUGH JUNE 30 OR FROM SEPTEMBER 1 THROUGH SOIL FREEZE-UP ('DORMANT SEEDING')
4. PLANTING IN JULY AND AUGUST IS GENERALLY NOT RECOMMEND DUE TO THE FREQUENCY OF DROUGHT DURING THIS TIME.
5. SEEDING CAN BE ACCOMPLISHED BY A VARIETY OF METHODS: NO-TILL SEEDER FOR MULTI-ACRE PLANTING; BROADCAST SEEDER; HAND BROADCAST FOR SMALL AREAS OF ONE ACRE OR LESS.
6. SEED QUALITY IS CRITICAL AND A SEED MIX SHOULD BE USED WITH A MINIMUM PERCENTAGE OF NON-SEED PLANT PARTS.

MAINTENANCE

- A SEASONAL MOWING OR BURNING MAY BE REQUIRED, ALTHOUGH CARE MUST BE TAKEN TO MAKE SURE THAT ANY MANAGEMENT IS COORDINATED WITH ESSENTIAL RESEEDING AND OTHER IMPORTANT ASPECTS OF MEADOW REESTABLISHMENT.
- IN THE FIRST YEAR WEEDS MUST BE CAREFULLY CONTROLLED AND CONSISTENTLY MOWED BACK TO 4-6 INCHES TALL WHEN THEY REACH 12 INCHES IN HEIGHT.
- IN THE SECOND YEAR, WEEDS SHOULD CONTINUE TO MONITORED AND MOWED AND RHIZOMATOUS WEEDS SHOULD BE HAND TREATED WITH HERBICIDE. WEEDS SHOULD NOT BE SPRAYED WITH HERBICIDE AS THE DRIFT FROM THE SPRAY MAY KILL LARGE PATCHES OF DESIRABLE PLANTS, ALLOWING WEEDS TO MOVE IN TO THESE NEW OPEN AREAS.
- IN THE BEGINNING OF THE THIRD SEASON, THE YOUNG MEADOW SHOULD BE BURNED OFF IN MID-SPRING. IF BURNING IS NOT POSSIBLE, THE MEADOW SHOULD BE MOWED VERY CLOSELY TO THE GROUND INSTEAD.
- THE MOWED MATERIAL SHOULD BE REMOVED FROM THE SITE TO EXPOSE THE SOIL TO THE SUN. THIS HELPS ENCOURAGE RAPID SOIL WARMING WHICH FAVORS THE ESTABLISHMENT OF "WARM SEASON" PLANTS OVER "COOL SEASON" WEEDS.

SPECIFICATIONS

VEGETATION:
- PLANT WITH NATIVE SPECIES MEADOW SEED MIX (SEE SPECIFIED SEED MIX)

SEED MIX

ERNST SEED MIX (ERNMX-230-1) – PA VALLEY & RIDGE PROVINCE UPL GRASS MIX (OR APPROVED EQUIVALENT)
SEEDING RATE: 20 LB PER ACRE

SPECIES LIST:
30% INDIANGRASS, PA ECOTYPE (SORGHASTRUM NUTANS, PA ECOTYPE)
30% LITTLE BLUESTEM, ALBANY PINE BUSH-NY ECOTYPE (SCHIZACHYRIUM SCOPARIUM, ALBANY PINE BUSH-NY ECOTYPE)
20% VIRGINIA WILDRYE, PA ECOTYPE (ELYMUS VIRGINICUS, PA ECOTYPE)
10% BIG BLUESTEM, 'NIAGARA' (ANDROPOGON GERARDII, 'NIAGARA')
5% DEERTONGUE, 'TIOGA' (PANICUM CLANDESTINUM (DICHANTHELIUM C.), 'TIOGA')
5% SWITCHGRASS, 'SHELTER' (PANICUM VIRGATUM, 'SHELTER')
TOTAL: 100%

BMP 6.7.3 SOIL AMENDMENT & RESTORATION

THE INSTALLATION OF THIS BMP IS A CRITICAL STAGE WHERE THE DESIGN ENGINEER MUST BE CONTACTED AT LEAST 48 HOURS IN ADVANCE TO PROVIDE CONSTRUCTION OVERSIGHT.

CONSTRUCTION SEQUENCE

1. ALL CONSTRUCTION SHOULD BE COMPLETED AND STABILIZED BEFORE BEGINNING SOIL RESTORATION.
2. COMPOST SHOULD BE ADDED AT A RATE OF 2:1 (SOIL:COMPOST). IF A PROPRIETARY PRODUCT IS USED, THE MANUFACTURER'S INSTRUCTIONS SHOULD BE FOLLOWED IN TERMS OF MIXING AND APPLICATION RATE.
3. ON-SITE SOILS WITH A MINIMUM ORGANIC CONTENT OF 5% CAN BE PROPERLY STOCKPILED (TO MAINTAIN ORGANIC CONTENT) AND REUSED.
4. PROCEDURE: ROTOTILL OR RIP THE SUBGRADE, REMOVE ROCKS, DISTRIBUTE THE COMPOST, SPREAD THE NUTRIENTS, ROTOTILL AGAIN.
5. SPREAD 2-3 INCHES OF APPROVED COMPOST ON EXISTING SOIL. TILL ADDED SOIL INTO EXISTING SOIL WITH ROTARY TILLER THAT IS SET TO A DEPTH OF 6 INCHES. ADD AN ADDITIONAL 4 INCHES OF APPROVED COMPOST TO BRING THE AREA UP TO GRADE.
6. ALL PADEP GUIDELINES (PA BMP MANUAL) REGARDING SOIL AMENDMENTS SHOULD BE ADHERED TO BY CONTRACTOR.

MAINTENANCE

- THE SOIL RESTORATION PROCESS MAY NEED TO BE REPEATED OVER TIME, DUE TO COMPACTION BY USE AND/OR SETTLING.

SPECIFICATIONS

SOIL AMENDMENT:
- 2:1 (SOIL:COMPOST RATIO)

NOTE: FILTREXX COMPOST BLANKETS INSTALLED PER THE MANUFACTER'S SPECIFICATIONS MAY BE USED AS AN APPROVED ALTERNATIVE TO THE ABOVE STIPULATED SOILS AMENDMENT. CONTACT DESIGN ENGINEER FOR SPECIFICATION INFORMATION AND JAMES WEAVER, WEAVER'S MULCH, STRASBURG ROAD, COATESVILLLE, PA 19320 AT 610 383-6818 FOR INSTALLATION INFORMATION.

NOTES:
PROVIDE MATERIALS AND WORKMANSHIP IN ACCORDANCE WITH THE APPROPRIATE SPECIFICATIONS AS OUTLINED IN PUBLICATION 408, SECTION 605.

USE PA DOT CLASS A CONCRETE OR BETTER.

CHAMFER EXPOSED EDGES 1 INCH.

ALL JOINTS TO BE FILLED WITH NON- EXTRUDING PRE-MOULDED EXPANSION FILLER.

D	L	W	A
15"	3.5'	3.0'	12"
18"	4.0'	3.0'	12"
21"	4.5'	3.0'	12"
24"	5.0'	3.5'	12"
30"	5.5'	4.0'	12"
36"	5.8'	4.6'	12"
42"	6.3'	5.8'	12"
48"	6.9'	6.9'	12"
54"	7.5'	8.0'	12"
60"	8.1'	9.2'	15"
72"	9.2'	11.5'	15"

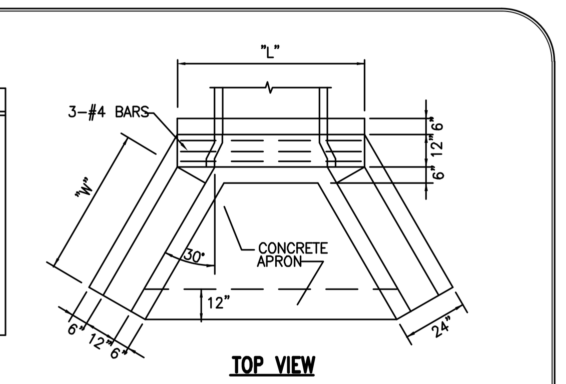

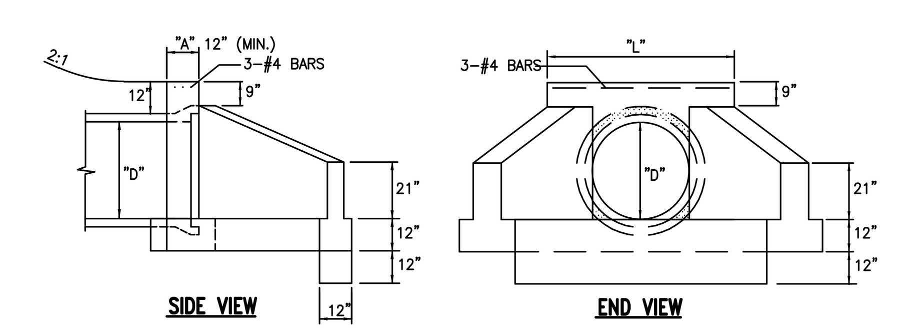

TYPE "D-W" ENDWALL DETIAL
SCALE: NO SCALE

THIS SHEET TO BE RECORDED

HOWELL ENGINEERING
Local Knowhow. Engineered.
Civil Engineering | Land Planning | Environmental
1250 Wrights Lane, West Chester, PA 19380
Phone: (610) 918-9002 Fax: (610) 918-9003

COMMONWEALTH OF PENNSYLVANIA
REGISTERED PROFESSIONAL
DENNY L. HOWELL
ENGINEER
053098-E

REV.	DATE	DESCRIPTION
1		
2		
3		
4		
5		
6		
7		
8		

GRADING PERMIT
PCSWM NOTES

CLIENT: A ROSS MYERS
PROJECT: ALLAN MYERS EQUIPMENT MUSEUM
LOCATION: 1805 BERKS ROAD
WORCESTER TOWNSHIP, MONTGOMERY COUNTY, PA

DATE:	03/10/2025
SCALE:	N.T.S.
DRAWN BY:	NAR
CHECKED BY:	JSR
PROJECT NO.:	4886
CAD FILE:	06 PCSWM PLAN.dwg
PLOTTED:	03/10/2025
DRAWING NO.:	C05.2
SHEET	07 OF 18

Q:\CIVIL 3D JOBS\4886\4886 PRODUCTION PLANS\SHEET SET\SUBDIVISION & LD\06 PCSWM PLAN.DWG

COPYRIGHT 2021 D.L. HOWELL & ASSOCIATES, INC. – ALL RIGHTS RESERVED. THESE PLANS ARE THE PROPERTY OF D.L. HOWELL & ASSOCIATES, INC. ANY USE OR REPRODUCTION OF THESE PLANS IN WHOLE OR PART, WITHOUT THE WRITTEN PERMISSION OF D.L. HOWELL & ASSOCIATES, INC. IS FORBIDDEN.

BMP 6.4.5: RAIN GARDEN/BIORETENTION WITH MANAGED RELEASE CONCEPT ("MRC")

THE INSTALLATION OF THIS BMP IS A CRITICAL STAGE WHERE THE DESIGN ENGINEER MUST BE CONTACTED AT LEAST 48 HOURS IN ADVANCE TO PROVIDE CONSTRUCTION OVERSIGHT.

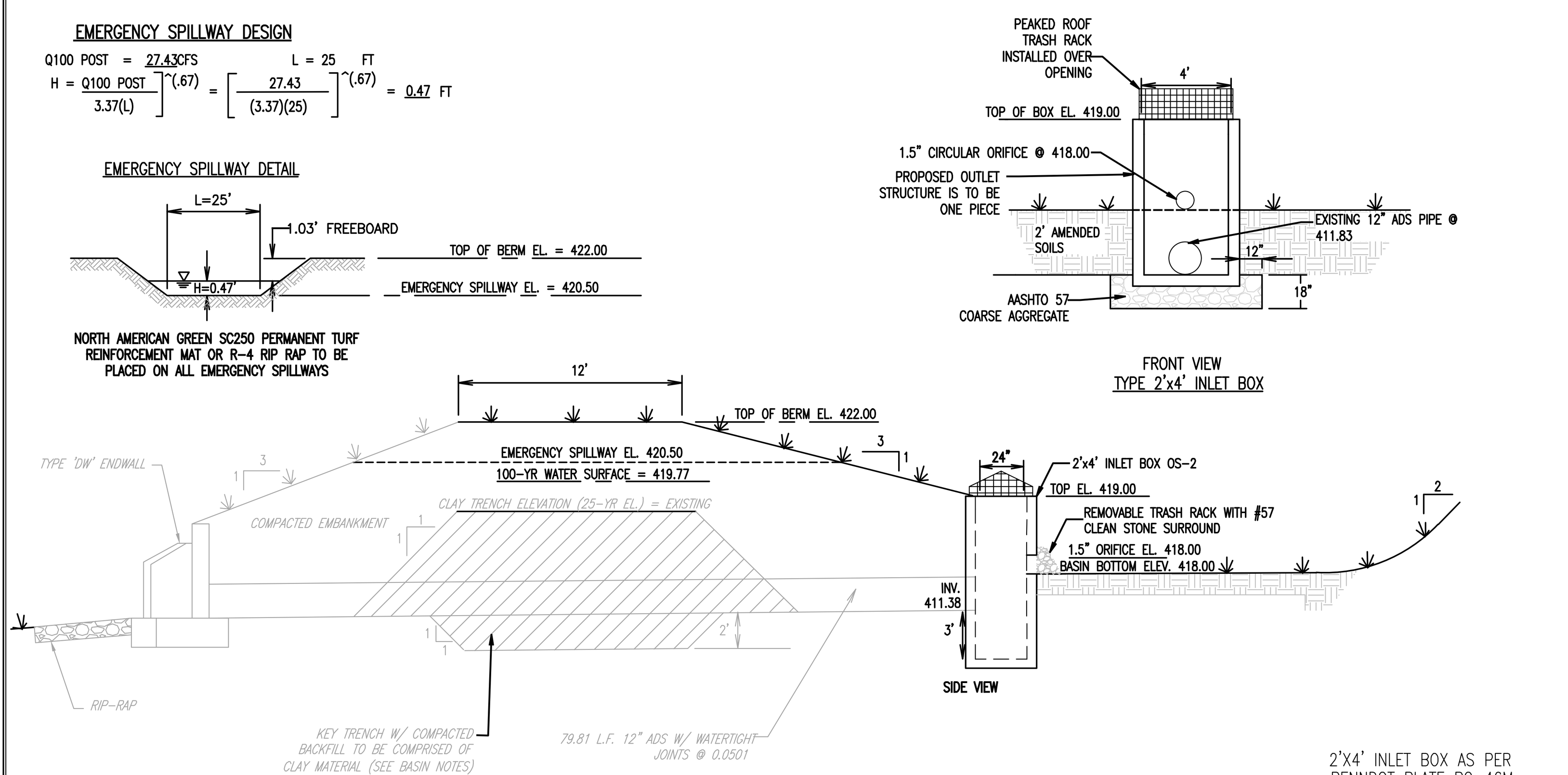

2'X4' INLET BOX AS PER PENNDOT PLATE RC-46M.

NOTES:
1. INLET BOXES SHALL BE IN ACCORDANCE WITH PENNDOT PUBLICATION 408/2011.
2. LADDER RUNGS SHALL BE INSTALLED AT ALL STORMWATER STRUCTURES OVER 4 FT. DEEP.
3. ALL PIPING ENTERING AN INLET SHALL BE CUT FLUSH WITH THE INSIDE OF THE INLET BOX.
4. THE ANNULAR SPACE WHERE PIPES ENTER INLET BOXES SHALL BE SEALED WITH NONSHRINKING GROUT.

DETENTION BASIN 2 DETAIL
NOT TO SCALE

DETENTION BASIN 2 CONSTRUCTION SPECIFICATIONS:

1. PERIMETER SEDIMENT CONTROL DEVICES MUST BE INSTALLED PRIOR TO CLEARING AND GRUBBING ACTIVITIES. AREAS WHERE THE BASIN AND EMBANKMENT IS TO BE PLACED SHALL BE CLEARED, GRUBBED, AND STRIPPED OF TOPSOIL TO REMOVE TREES, VEGETATION, ROOTS OR OTHER OBJECTIONABLE MATERIAL.
2. EXCAVATE BASIN TO WITHIN TWO FEET OF FINAL ELEVATION OF THE BASIN FLOOR. FINAL EXCAVATION TO FINISHED GRADE SHALL BE DEFERRED UNTIL ALL UPGRADIENT-DISTURBED AREAS HAVE BEEN STABILIZED. THE BASIN BOTTOM AND SIDE EMBANKMENTS SHALL BE ROUGHENED WERE SHEARED AND SEALED BY HEAVY EQUIPMENT.
3. ALL BASIN EXCAVATION EQUIPMENT SHALL BE PERFORMED LIGHTWEIGHT, RUBBER-TRACKED EQUIPMENT.
4. A CUT-OFF TRENCH SHALL BE EXCAVATED ALONG THE CENTERLINE OF THE EARTH FILL EMBANKMENT. THE MINIMUM DEPTH SHALL BE FOUR FEET. THE CUT-OFF TRENCH SHALL EXTEND UP BOTH ABUTMENTS TO SIX INCHES BELOW THE EMERGENCY SPILLWAY CREST ELEVATION. THE BOTTOM WIDTH SHALL BE FOUR (4) FEET, BUT WIDE ENOUGH TO PERMIT OPERATION OF EXCAVATION AND COMPACTION EQUIPMENT. THE SIDE SLOPES SHALL BE NO STEEPER THAN 3H:1V.
5. FILL MATERIAL FOR THE CUT-OFF TRENCH SHALL BE OF UNIFIED SOIL TYPE CL (OR APPROVED EQUIVALENT).
6. FILL MATERIAL SHALL CONTAIN SUFFICIENT MOISTURE SO THAT IT CAN BE FORMED BY HAND INTO A BALL WITH OUT CRUMBLING. IF WATER CAN BE SQUEEZED OUT OF THE BALL, IT IS TOO WET FOR PROPER COMPACTION.
7. FILL MATERIAL SHALL BE PLACED IN SIX INCH TO EIGHT-INCH CONTINUOUS LIFTS ACROSS THE ENTIRE LENGTH OF THE EMBANKMENT. EACH FILL LIFT SHALL BE COMPACTED TO AN AVERAGE OF 95% OF MAXIMUM MODIFIED DRY DENSITY PER ASTM D-1557.
8. FILL MATERIAL FOR THE EMBANKMENT SHALL BE MINERAL SOIL, FREE OF ROOTS, WOODY VEGETATION, OVERSIZED ROCKS OR OTHER OBJECTIONABLE MATERIAL. RELATIVELY PERVIOUS MATERIAL SUCH AS SAND OR GRAVEL (UNIFIED SOIL CLASSES GW, GP, SW AND SP) OR ORGANIC MATERIALS (UNIFIED SOIL CLASSES OL AND OH) SHALL NOT BE PLACED IN THE EMBANKMENT.
9. THE EMBANKMENT SHALL BE CONSTRUCTED TO AN ELEVATION OF 10 PERCENT HIGHER THAN THE DESIGN HEIGHT TO ALLOW FOR SETTLEMENT IF COMPACTION IS OBTAINED WITH HAULING EQUIPMENT. IF COMPACTION IS OBTAINED THROUGH THE USE OF COMPACTORS, THE OVER BUILD MAY BE REDUCED TO NOT LESS THAN 5 PERCENT.
10. FOLLOWING COMPLETION OF THE FINAL GRADING, THE BOTTOM OF THE BASIN SHALL BE DEEPLY TILLED WITH A ROTARY TILLER OR DISC HARROW AND THEN SMOOTHED OUT WITH A LEVELING DRAG OR EQUIVALENT GRADING EQUIPMENT.
11. THE BASIN SHALL BE STABILIZED IN ACCORDANCE WITH THE APPROPRIATE VEGETATIVE STANDARD AND SPECIFICATIONS IMMEDIATELY FOLLOWING CONSTRUCTION.
12. IF AN INSUFFICIENT AMOUNT OF APPROPRIATE SOILS, AS SPECIFIED IN THESE SPECIFICATIONS, TO CONSTRUCT THE BASIN EMBANKEMENT EXIST ON-SITE CONTACT THE GEOTECHNICAL ENGINEER FOR AN APPROPRIATE SOLUTION.
13. ONCE BMP'S HAVE BEEN CONVERTED TO THEIR FINAL CONFIGURATION, CONTRIBUTING AREAS SHALL BE AT MINIMUM OF 70% STABILIZATION.
14. BASIN EMBANKMENTS TO BE INSPECTED BY THE TOWNSHIP ENGINEER.

BASIN SEQUENCE OF CONSTRUCTION

THIS IS CRITICAL STAGE WHERE THE DESIGN ENGINEER MUST BE CONTACTED AT LEAST 48 HOURS IN ADVANCE TO PROVIDE CONSTRUCTION OVERSIGHT. CONSTRUCTION OVERSIGHT BY A PROFESSIONAL ENGINEER IS REQUIRED TO CLOSE OUT THE NPDES PERMIT.

1. EXCAVATE AND CONSTRUCT SEDIMENT BASIN. REFERENCE SEDIMENT BASIN DETAILS AND SPECIFICATIONS ON EROSION CONTROL SHEETS. PERMANENT BASIN LINER (PVC AND GEOTEXTILE OR CLAY, SEE SEPARATE LINER DETAIL) SHALL BE INSTALLED AT THIS TIME AND MAINTAINED THROUGHOUT THE CONSTRUCTION PHASE AND THEN DURING BASIN CONVERSION. ON-SITE GEOTECHNICAL ENGINEER SHALL OBSERVE LINER INSTALLATION.
2. CONSTRUCT EMBANKMENTS AND KEY TRENCH.
3. INSTALL OUTLET STRUCTURES, SKIMMER, AND RIP RAP OUTLETS, ETC.
4. PLACE WOODEN CLEAN OUT STAKE IN BASIN AND STABILIZE AS SHOWN ON THE PLANS.
5. INSTALLATION SHALL BE PLANNED AND CONDUCTED IN A MANNER TO PRESERVE ALL EXISTING VEGETATION THAT IS NOT REQUIRED TO BE REMOVED AND TO MINIMIZE THE LENGTH OF EXPOSURE AT ANY ONE TIME. SEDIMENT BASIN EMBANKMENTS MUST BE STABILIZED IMMEDIATELY WITH EROSION CONTROL BLANKET.
6. SEE SEPARATE BASIN CONVERSION SEQUENCE ON E&S NOTES SHEET.

MAINTENANCE

1. CATCH BASINS AND INLETS (UPGRADIENT OF BASIN) SHALL BE INSPECTED AND CLEANED AT LEAST ONCE PER YEAR AND AFTER MAJOR RUNOFF EVENTS.
2. THE VEGETATION ALONG THE SURFACE OF THE BASIN SHALL BE MAINTAINED IN GOOD CONDITION, AND ANY BARE SPOTS REVEGETATED AS SOON AS POSSIBLE.
3. VEHICLES SHALL NOT BE PARKED OR DRIVEN ON AN BASIN, AND CARE SHALL BE TAKEN TO AVOID EXCESSIVE COMPACTION BY MOWERS.
4. INSPECT THE BASIN AFTER RUNOFF EVENTS AND MAKE SURE THAT RUNOFF DRAINS DOWN WITHIN 72 HOURS. MOSQUITO'S SHALL NOT BE A PROBLEM IF THE WATER DRAINS IN 72 HOURS. MOSQUITOES REQUIRE A CONSIDERABLY LONG BREEDING PERIOD WITH RELATIVELY STATIC WATER LEVELS.
5. ALSO INSPECT FOR ACCUMULATION OF SEDIMENT, DAMAGE TO OUTLET CONTROL STRUCTURES, EROSION CONTROL MEASURES, SIGNS OF WATER CONTAMINATION/SPILLS, AND SLOPE STABILITY IN THE BERMS.
6. MOW ONLY AS APPROPRIATE FOR VEGETATIVE COVER SPECIES.
7. REMOVE ACCUMULATED SEDIMENT FROM BASIN AS REQUIRED. PROPERLY DISPOSE OF SEDIMENT.

MANAGED RELEASE CONCEPT (MRC) BMPs SHALL FOLLOW AN ENHANCED OPERATION AND MAINTENANCE

a. UPGRADIENT CATCH BASINS AND INLETS SHOULD BE INSPECTED AND CLEANED ANNUALLY, OR MORE OFTEN IF HISTORICAL MAINTENANCE RECORDS SUGGEST A MORE FREQUENT CLEANING.
b. THE VEGETATION (FOR THE MRC BMP AND CONTRIBUTING DRAINAGE AREA) SHOULD BE MAINTAINED IN GOOD CONDITION, AND ANY BARE SPOTS REVEGETATED.
c. CARE SHOULD BE TAKEN TO AVOID EXCESSIVE COMPACTION BY MOWERS. MOW ONLY AS APPROPRIATE FOR VEGETATIVE SPECIES.
d. INSPECT AT LEAST TWO TIMES PER YEAR AFTER RUNOFF EVENTS GREATER THAN 0.8 INCH AND MAKE SURE THAT RUNOFF DRAINS DOWN WITHIN THE DESIGN PARAMETERS (A LICENSED PROFESSIONAL ENGINEER SHOULD CLEARLY IDENTIFY WHAT THESE PARAMETERS ARE).
e. AT LEAST TWO TIMES PER YEAR, OR MORE IF HISTORICAL MAINTENANCE INDICATE IT IS NECESSARY, INSPECT FOR ACCUMULATION OF SEDIMENT, DAMAGE TO OUTLET CONTROL STRUCTURES, EROSION, SIGNS OF WATER CONTAMINATION/SPILLS, AND INSTABILITY.
f. LEAF LITTER NEEDS TO BE REMOVED ANNUALLY.
g. AS NEEDED, REMOVE ACCUMULATED SEDIMENT AS REQUIRED TO MAINTAIN THROUGH THE MRCs SOIL MEDIA AND TO MAINTAIN WATER QUALITY FUNCTIONALITY. RESTORE ORIGINAL CROSS SECTION. PROPERLY DISPOSE OF SEDIMENT.
h. ALL MRC BMP COMPONENTS SHOULD BE MAINTAINED AS INDICATED IN THE STORMWATER BMP MANUAL.

SPECIFICATIONS

VEGETATION:

ERNST SEED MIX (ERNMX-180) – RAIN GARDEN MIX (OR APPROVED EQUIVALENT)
SEEDING RATE: 20 LB PER ACRE WITH A COVER CROP OF GRAIN RYE AT 30 LB PER ACRE

SPECIES LIST:
29% RIVER OATS, PA/VA ECOTYPE BLEND (CHASMANTHIUM LATIFOLIUM (UNIOLA LATIFOLIA), PA/VA ECOTYPE BLEND)
15% FOWL BLUEGRASS (POA PALUSTRIS)
15% VIRGINIA WILDRYE, PA ECOTYPE (ELYMUS VIRGINICUS, PA ECOTYPE)
10% REDTOP PANICGRASS, PA ECOTYPE (PANICUM RIGIDULUM (P. STIPITATUM), PA ECOTYPE)
5% PURPLE CONEFLOWER (ECHINACEA PURPUREA)
3% BLACKEYED SUSAN, COASTAL PLAIN NC ECOTYPE (RUDBECKIA HIRTA, COASTAL PLAIN NC ECOTYPE)
3% OHIO SPIDERWORT, PA ECOTYPE (TRADESCANTIA OHIENSIS, PA ECOTYPE)
3% SMOOTH BLUE ASTER, NY ECOTYPE (ASTER LAEVIS (SYMPHYOTRICHUM LAEVE), NY ECOTYPE)
2% MARSH (DENSE) BLAZING STAR (SPIKED GAYFEATHER), PA ECOTYPE (LIATRIS SPICATA, PA ECOTYPE)
2% TALL WHITE BEARDTONGUE, PA ECOTYPE (PENSTEMON DIGITALIS, PA ECOTYPE)
2% LANCELEAF COREOPSIS, COASTAL PLAIN NC ECOTYPE (COREOPSIS LANCEOLATA, COASTAL PLAIN NC ECOTYPE)
2% PARTRIDGE PEA, PA ECOTYPE (CHAMAECRISTA FASCICULATA (CASSIA F.), PA ECOTYPE)
2% OXEYE SUNFLOWER, PA ECOTYPE (HELIOPSIS HELIANTHOIDES, PA ECOTYPE)
2% AUTUMN BENTGRASS, PA ECOTYPE (AGROSTIS PERENNANS, PA ECOTYPE)
1% SWAMP MILKWEED, PA ECOTYPE (ASCLEPIAS INCARNATA, PA ECOTYPE)
1% EARLY GOLDENROD, PA ECOTYPE (SOLIDAGO JUNCEA, PA ECOTYPE)
1% WILD SENNA, VA & WV ECOTYPE (SENNA HEBECARPA (CASSIA H.), VA & WV ECOTYPE)
1% BLUE FALSE INDIGO, SOUTHERN WV ECOTYPE (BAPTISIA AUSTRALIS, SOUTHERN WV ECOTYPE)
0.8% WILD BERGAMOT, PA ECOTYPE (MONARDA FISTULOSA, PA ECOTYPE)
0.2% SLENDER MOUNTAINMINT (PYCNANTHEMUM TENUIFOLIUM)
TOTAL: 100%

EMBANKMENT CONSTRUCTION/COMPACTION NOTES

1. KEY TRENCH TO EXTEND 4 FEET INTO UNDISTURBED SUBSOIL.
2. IMPERVIOUS CORE AND KEY TRENCH W/ COMPACTED BACKFILL UINIFIED SOILS TYPE CL-ML OR CL CLASSIFICATION OR APPROVED EQUAL.
3. THE CONTRACTOR SHALL PROVIDE SOIL TESTING OR SOIL VERIFICATION FOR CORE TRENCH BACKFILL TO THE TOWNSHIP ENGINEER PRIOR TO CONSTRUCTING EMBANKMENT.
4. CORE TRENCH TOP ELEVATION SHALL BE SET AT OR ABOVE THE 25 YEAR WATER SURFACE ELEVATION.
5. THE CUT-OFF TRENCH SHALL BE EXCAVATED ALONG THE CENTERLINE OF THE EARTH FILL EMBANKMENT. THE MINIMUM DEPTH SHALL BE FOUR FEET. THE CUT-OFF TRENCH SHALL EXTEND UP BOTH ABUTMENTS TO THE 25 YEAR STORM ELEVATION PROVIDED ON THE DETAIL (THIS SHEET). THE BOTTOM WIDTH SHALL BE FOUR (4) FEET, BUT WIDE ENOUGH TO PERMIT OPERATION OF EXCAVATION AND COMPACTION EQUIPMENT. THE SIDE SLOPES SHALL BE NO STEEPER THAN 4H:1V.
6. ALL DETENTION BASIN EMBANKMENTS SHALL BE PLACED AT A MAXIMUM OF EIGHT-INCH LIFTS TO A MINIMUM OF 95% OF MAXIMUM DRY DENSITY AS ESTABLISHED BY ASTM D-1557. PRIOR TO PROCEEDING TO THE NEXT LIFT, THE COMPACTION SHALL BE CHECKED BY THE TOWNSHIP ENGINEER OR THE SOILS ENGINEER. THE DEVELOPER'S CONTRACTOR SHALL OBTAIN THE SERVICES OF A QUALIFIED LABORATORY TECHNICIAN TO CONDUCT COMPACTION TESTS ON THE LEADING AND THE TRAILING EDGE OF THE BERM ALONG WITH THE TOP OF BERM. ALL TESTS SHALL BE FURNISHED TO THE TOWNSHIP FOR REVIEW.

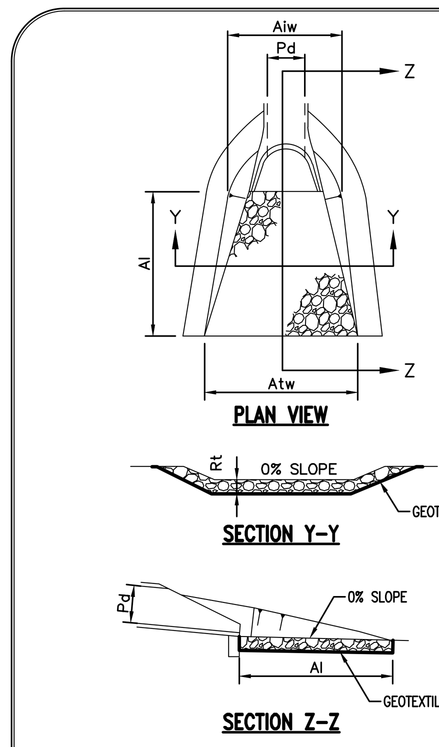

OUTLET NO.	PIPE DIA Pd (IN)	RIPRAP SIZE R-_	RIPRAP THICK. Rt (IN)	APRON LENGTH Al (FT)	APRON INITIAL WIDTH Aiw (FT)	APRON TERMINAL WIDTH Atw (FT)
EW-3	15	R-5	27	9	3.75	7.35

NOTES:

ALL APRONS SHALL BE CONSTRUCTED TO THE DIMENSIONS SHOWN. TERMINAL WIDTHS SHALL BE ADJUSTED AS NECESSARY TO MATCH RECEIVING CHANNELS.

ALL APRONS SHALL BE INSPECTED AT LEAST WEEKLY AND AFTER EACH RUNOFF EVENT. DISPLACED RIPRAP WITHIN THE APRON SHALL BE REPLACED IMMEDIATELY.

STANDARD CONSTRUCTION DETAIL #9-1
RIPRAP APRON AT PIPE OUTLET WITH FLARED END SECTION OR ENDWALL
NOT TO SCALE

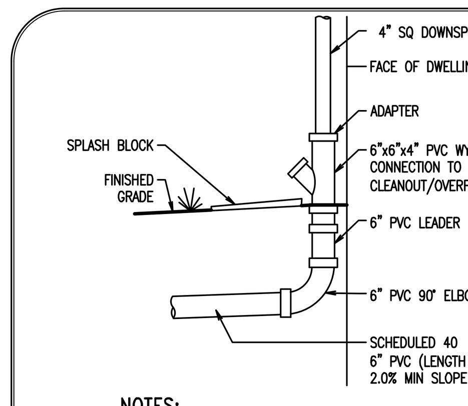

NOTES:
1. PVC MAY BE SUBSTITUTED WITH AN APPROVED EQUAL MATERIAL
2. LEAF GUARDS TO BE INSTALLED ON ALL GUTTER DOWNSPOUTS

DOWNSPOUT CONNECTION DETAIL
NOT TO SCALE

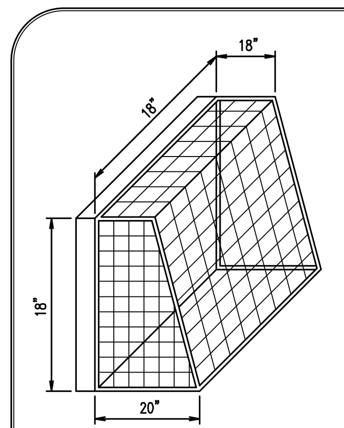

TRASH RACK SPECIFICATIONS

A TRASH RACK SHALL BE INSTALLED ON ALL OUTLET STRUCTURES. TRASH RACKS ARE TO BE CONSTRUCTED OF #5 REBAR WITH A 3/8 INCH BY 1.5 INCH FLAT STEEL ANCHORING FRAME. THE REBAR IS TO BE CONSTRUCTED AT SIX INCHES ON CENTER IN EITHER DIRECTION. ALL REBAR CROSSINGS ARE TO BE WELDED. THE TRASH RACK IS TO BE MOUNTED TO THE OUTLET STRUCTURE USING FOUR-INCH BOLTS WITH CONCRETE ANCHORS AT A MAXIMUM OF TWELVE-INCH SPACING. THE TRASH RACK IS TO BE TRIPLE COATED WITH A RUST-PROHIBITIVE COATING. ALL HARDWARE IS TO BE STAINLESS STEEL. THE TRASH RACK IS TO BE SIZED TO ALLOW A MINIMUM OF SIX INCHES OF CLEARANCE AROUND ANY ORIFICE LOCATED ON THE OUTLET STRUCTURE. TRASH RACKS ARE TO BE A MINIMUM OF 18 INCHES IN DEPT

TRASH RACK DETAIL
NOT TO SCALE

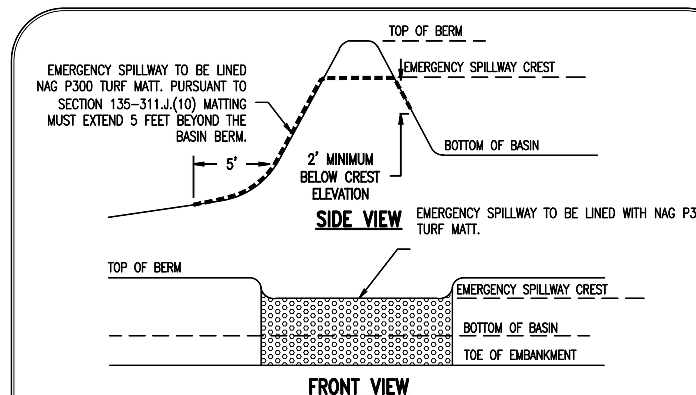

BASIN SPILLWAY LINING DETAIL
NOT TO SCALE

BMP 6.6.4: WATER QUALITY FILTERS

THE INSTALLATION OF THIS BMP IS A CRITICAL STAGE WHERE THE DESIGN ENGINEER MUST BE CONTACTED AT LEAST 48 HOURS IN ADVANCE TO PROVIDE CONSTRUCTION OVERSIGHT.

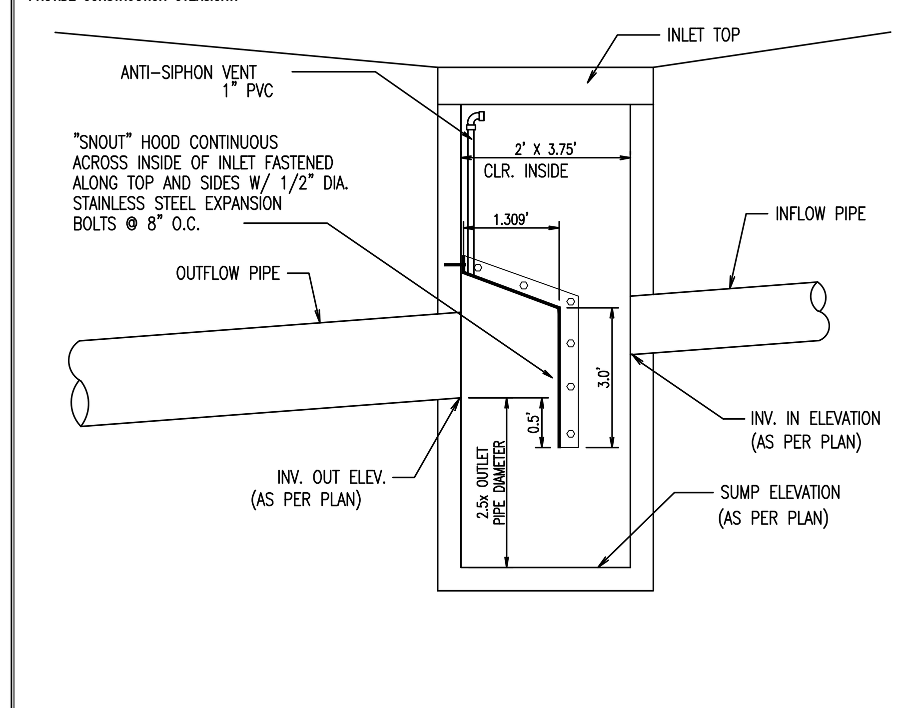

WATER QUALITY STRUCTURE DETAIL
NOT TO SCALE

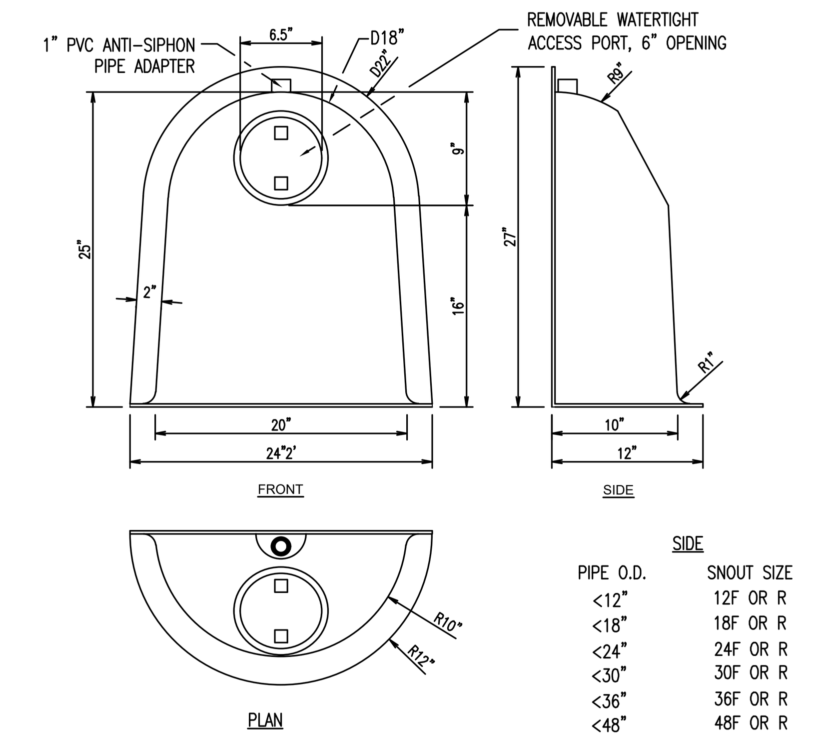

SIDE

PIPE O.D.	SNOUT SIZE
<12"	12F OR R
<18"	18F OR R
<24"	24F OR R
<30"	30F OR R
<36"	36F OR R
<48"	48F OR R

F=(FLAT BACK, FOR SQUARE STRUCTURES)
R= (ROUND STRUCTURES)

NOTE:
1. DIMENSIONS SHOWN FOR A 18F SNOUT OIL & DEBRIS STOP. DIMENSIONS VARY DEPENDING ON SNOUT SIZE. SEE TABLE FOR SNOUT SIZES GUIDE.
2. SNOUTS SHALL BE SIZED AND INSTALLED PER MANUFACTURER'S SPECIFICATIONS.

18F SNOUT OIL & DEBRIS STOP
NOT TO SCALE

STORMWATER WATER QUALITY STRUCTURE OPERATION AND MAINTENANCE SPECIFICATIONS:

1) THE PROPERTY OWNER SHALL AT ALL TIMES PROPERLY OPERATE AND MAINTAIN THE WATER QUALITY STRUCTURES PER MANUFACTURERS SPECIFICATIONS. AN INSPECTION REPORT SHALL BE PROVIDED TO THE TOWNSHIP FOLLOWING EACH INSPECTION EVENT. INSPECTIONS OF THE WATER QUALITY UNITS SHALL BE PERFORMED QUARTERLY FOR THE FIRST YEAR OF OPERATION AND SEMIANNUALLY THEREAFTER.

2) THE INSPECTION REPORT SHALL INCLUDE THE FOLLOWING INFORMATION FOR EACH INSPECTION EVENT:
A. THE DATE AND TIME OF INSPECTION;
B. THE NAME OF THE INDIVIDUAL(S) WHO PERFORMED THE INSPECTION;
C. THE TOTAL DEPTH OF SEDIMENT IN THE STRUCTURE;
D. THE TOTAL DEPTH OF OIL AND GREASE IN THE STRUCTURE; AND
E. TRANSPORT AND DISPOSAL RECORDS OF REMOVED PRODUCT(S).

3) PER MANUFACTURER RECOMMENDATION, THE STRUCTURE SHALL BE CLEANED WHEN THE SUMP IS HALF FULL. THE SUMP IS 3.12 FEET DEEP AND SHOULD THEREFORE BE CLEANED OUT WHEN 1.5 FEET OF MATERIAL COLLECTS IN THE SUMP.

4) MAINTENANCE IS BEST DONE WITH A VACUUM TRUCK. TRANSPORT AND DISPOSAL OF SEDIMENT AND OIL SHALL BE DONE IN ACCORDANCE WITH APPLICABLE STATE AND FEDERAL REGULATIONS.

5) TO MAINTAIN THE SNOUT HOODS THEMSELVES, AN ANNUAL INSPECTION OF THE ANTI-SIPHON VENT AND ACCESS HATCH ARE RECOMMENDED. A SIMPLE FLUSHING OF THE VENT, OR A GENTLE RODDING WITH A FLEXIBLE WIRE ARE ALL THAT'S TYPICALLY NEEDED TO MAINTAIN THE ANTI-SIPHON PROPERTIES. OPENING AND CLOSING THE ACCESS HATCH ONCE A YEAR ENSURES A LIFETIME OF TROUBLE-FREE SERVICE.

6) THE OWNER SHALL PERMIT THE TOWNSHIP OFFICIALS AND/OR THEIR AGENTS TO ENTER THE PROPERTY TO INSPECT THE STORMWATER WATER QUALITY STRUCTURE AND TO SAMPLE ANY DISCHARGE OF STORMWATER.

SNOUT INLET SCHEDULE	
INLET	SIZE
IM2	18F

BMP 6.4.3: SUBSURFACE INFILTRATION BED 1

THE INSTALLATION OF THIS BMP IS A CRITICAL STAGE WHERE THE DESIGN ENGINEER MUST BE CONTACTED AT LEAST 48 HOURS IN ADVANCE TO PROVIDE CONSTRUCTION OVERSIGHT.

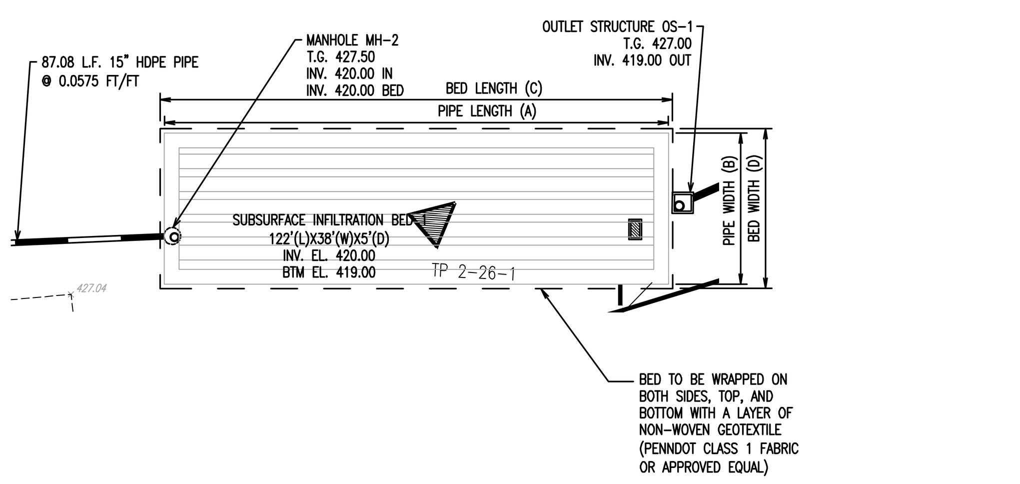

PLAN VIEW

GENERAL NOTES:
1. ALL PIPE LISTED AS HDPE SHALL BE FULLY PERFORATED HIGH DENSITY POLYETHYLENE PIPE.
2. THE CONTRACTOR SHALL SUBMIT SHOP DRAWINGS FOR THE TOWNSHIP ENGINEER'S APPROVAL PRIOR TO INSTALLATION.

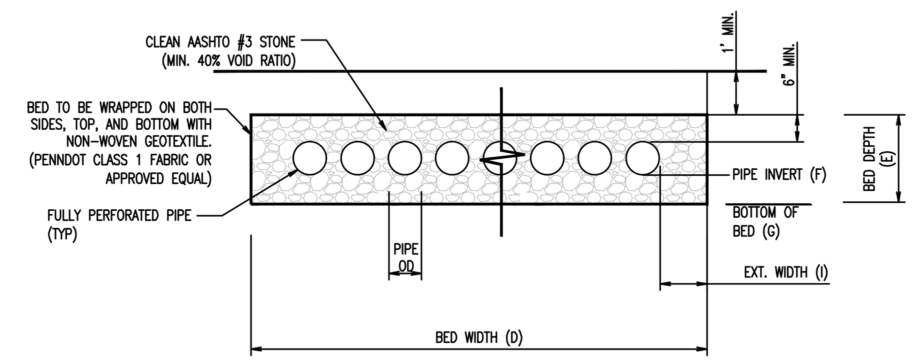

SECTIONAL VIEW

PIPE MATERIAL	PIPE ID	SIZE OD	NUMBER OF PIPES	A PIPE LENGTH	B PIPE WIDTH	C BED LENGTH	D BED WIDTH	E BED DEPTH	F PIPE INVERT	G BOTTOM ELEV.	H PIPE SPACING	I EXTERIOR STONE	BASIN SLOPE
HDPE	3.00	3.50	7	113.00	36.00	122.00	38.00	5.50	420.00	419.00	1.92	1.00	0.0000

SUBSURFACE INFILTRATION BED 1 DETAIL
NOT TO SCALE

OPERATION AND MAINTENANCE:

1. SUBSURFACE INFILTRATION BED FABRIC AND STONE SHALL BE KEPT CLEAN OF SOIL/SEDIMENT DURING THE INSTALLATION PROCESS. IF INSPECTION INDICATES THAT SOIL/ SEDIMENT HAS ENTERED SUBSURFACE INFILTRATION BED FABRIC AND STONE, APPROPRIATE MEASURES (I.E. CLEANING THE SOIL/SEDIMENT FROM THE FABRIC, STONE, CONSTRUCTED FITLER ETC. AND OR REPLACEMENT OF THE FABRIC AND STONE) SHALL BE ADDRESSED.
2. INFLOW AND OUTFLOW POINTS INTO THE SYSTEMS SHALL BE KEPT CLEAR OF LEAVES AND OTHER DEBRIS. ANY LEAVES OR DEBRIS WILL NEGATIVELY IMPACT THE PERFORMANCE OF THESE SYSTEMS. ALL DOWNSPOUTS AND OVERFLOW PIPES SHALL BE KEPT IN GOOD WORKING ORDER.
3. IF GROUNDWATER OR BEDROCK IS ENCOUNTERED DURING THE INSTALLATION OF THE SUBSURFACE INFILTRATION BED, STOP WORK AND CONTACT THE TOWNSHIP AND DESIGN ENGINEER FOR AN ALTERNATE BMP LOCATION OR NEW DESIGN.
4. CATCH BASINS AND INLETS (UPGRADIENT OF SUBSURFACE INFILTRATION BED) SHALL BE INSPECTED AND CLEANED AT LEAST TWICE PER YEAR AND AFTER MAJOR RUNOFF EVENTS.
5. INSPECT THE SUBSURFACE INFILTRATION BED AFTER RUNOFF EVENTS AND MAKE SURE THAT RUNOFF DRAINS DOWN WITHIN 2 DAYS.
6. ALSO INSPECT FOR ACCUMULATION OF SEDIMENT, DAMAGE TO OUTLET CONTROL STRUCTURES, EROSION CONTROL MEASURES, AND SIGNS OF WATER CONTAMINATION/SPILLS.
7. REMOVE ACCUMULATED SEDIMENT FROM SUBSURFACE INFILTRATION BED AS REQUIRED; PROPERLY DISPOSE OF SEDIMENT.
8. THE FACILITY IS CONSIDERED TO BE AT FAILURE WHEN THE SYSTEM FAILS TO DEWATER WITHIN 2 DAYS AFTER A STORM EVENT.

SPECIFICATIONS

STONE:
- SHALL BE UNIFORMLY GRADED COARSE AGGREGATE, AASHTO SIZE NUMBER 57 PER AASHTO SPECIFICATIONS, PART I, 19TH ED., 1998, OR LATER AND SHALL HAVE VOIDS 40% AS MEASURED BY ASTM-C29.

NON-WOVEN GEOTEXTILE:
- SHALL CONSIST OF NEEDLED NON-WOVEN POLYPROPYLENE FIBERS AND MEET THE FOLLOWING PROPERTIES:
  a. GRAB TENSILE STRENGTH (ASTM-D4632) 120 LBS
  b. MULLEN BURST STRENGTH (ASTM-D3786) 225 PSI
  c. FLOW RATE (ASTM-D4491) 95 GAL/MIN/FT^2
  d. UV RESISTANCE AFTER 500 HRS (ASTM-D4355) 70%
  e. HEAT-SET OR HEAT-CALENDARED FABRICS ARE NOT PERMITTED
  •••• ACCEPTABLE TYPES INCLUDE MIRAFI 140N, AMOCO 4547, AND GEOTEX 451.

TOPSOIL:
- MAY BE AMENDED WITH COMPOST (IF APPLICABLE)

PIPE:
- SHALL BE CONTINUOUSLY PERFORATED, SMOOTH INTERIOR, WITH A MINIMUM INSIDE DIAMETER OF 6-INCHES.
- HIGH-DENSITY POLYETHYLENE (HDPE) PIPE SHALL MEET AASHTO M252, TYPE S OR AASHTO M294, TYPE S.

STORM DRAIN INLETS AND STRUCTURES:
a. CONCRETE CONSTRUCTION: CONCRETE CONSTRUCTION SHALL BE IN ACCORDANCE WITH SECTION 1001, PENNDOT SPECIFICATIONS, 1990 OR LATEST EDITION.
b. PRECAST CONCRETE INLETS AND MANHOLES: PRECAST CONCRETE INLETS MAY BE SUBSTITUTED FOR CAST-IN-PLACE STRUCTURES AND SHALL BE CONSTRUCTED AS SPECIFIED FOR CAST-IN-PLACE. PRECAST STRUCTURES MAY BE USED IN ONLY THOSE AREAS WHERE THERE IS NO CONFLICT WITH EXISTING UNDERGROUND STRUCTURES THAT MAY NECESSITATE REVISION OF INVERTS. TYPE M STANDARD PENNDOT INLET BOXES WILL BE MODIFIED TO PROVIDE MINIMUM 12 INCH SUMP STORAGE AND BOTTOM LEACHING BASINS, OPEN TO GRAVEL SUMPS IN SUB-GRADE, WHEN SITUATED IN THE RECHARGE BED.
c. ALL PVC CATCH BASINS/CLEANOUTS/INLINE DRAINS SHALL HAVE H-10 OR H-20 RATED GRATES, DEPENDING ON THEIR PLACEMENT (H-20 IF VEHICULAR LOADING).
d. STEEL REINFORCING BARS OVER THE TOP OF THE OUTLET STRUCTURE SHALL CONFORM TO ASTM A615, GRADES 60 AND 40.
e. PERMANENT TURF REINFORCEMENT MATTING SHALL BE INSTALLED ACCORDING TO MANUFACTURERS' SPECIFICATIONS. (IF APPLICABLE)

ALTERNATIVE STORAGE MEDIA (IF APPLICABLE):
- FOLLOW MANUFACTURER'S SPECIFICATIONS

VEGETATION (IF APPLICABLE):
- PLANT WITH NATIVE SPECIES

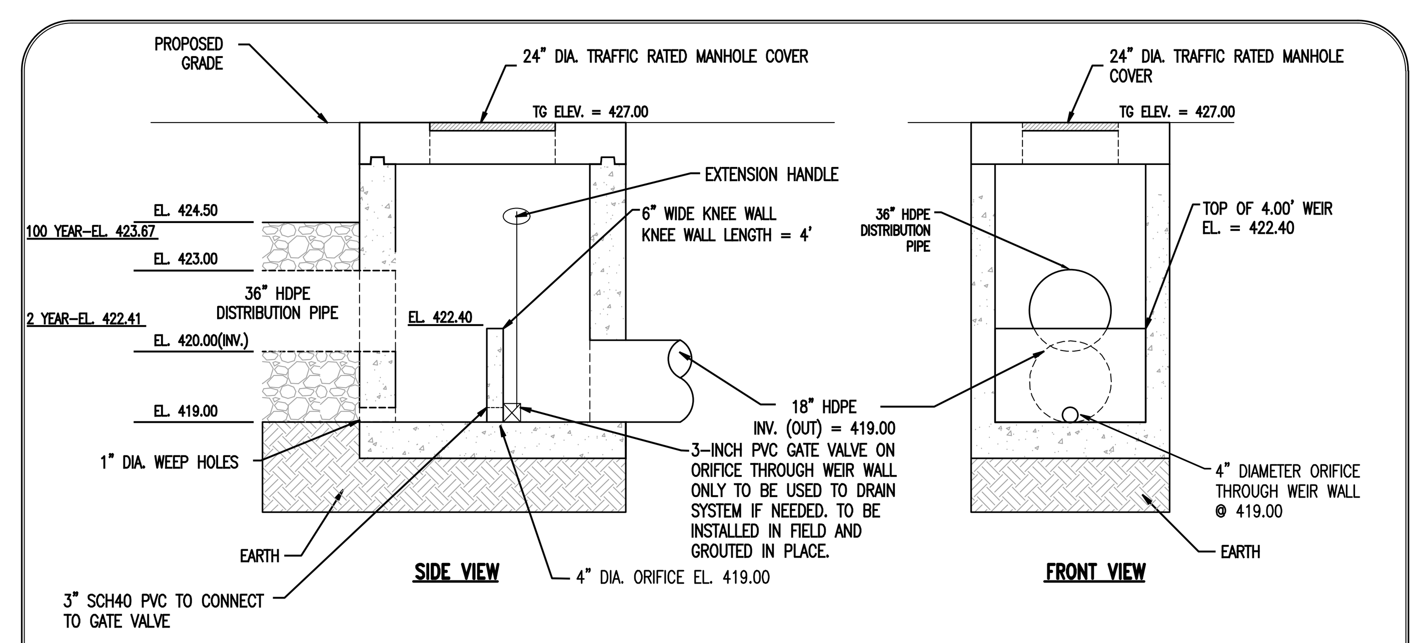

OUTLET STRUCTURE DETAIL FOR UNDERGROUND BED #2
NOT TO SCALE

HOWELL ENGINEERING
Local Knowhow. Engineered.
Civil Engineering | Land Planning | Environmental
1250 Wrights Lane, West Chester, PA 19380
Phone: (610) 918-9002 Fax: (610) 918-9003

COMMONWEALTH OF PENNSYLVANIA
REGISTERED PROFESSIONAL
DENNY L. HOWELL
ENGINEER
053098-E

REV.	DATE	DESCRIPTION
1		
2		
3		
4		
5		
6		
7		
8		

GRADING PERMIT
PCSWM DETAILS

CLIENT: A ROSS MYERS
PROJECT: ALLAN MYERS EQUIPMENT MUSEUM
LOCATION: 1805 BERKS ROAD WORCESTER TOWNSHIP, MONTGOMERY COUNTY, PA

DATE:	03/10/2025
SCALE:	N.T.S.
DRAWN BY:	NAR
CHECKED BY:	JSR
PROJECT NO.:	4886
CAD FILE:	06 PCSWM PLAN.dwg
PLOTTED:	03/10/2025
DRAWING NO.:	C05.3
SHEET	08 OF 18

COPYRIGHT 2021 D.L. HOWELL & ASSOCIATES, INC. – ALL RIGHTS RESERVED. THESE PLANS ARE THE PROPERTY OF D.L. HOWELL & ASSOCIATES, INC. ANY USE OR REPRODUCTION OF THESE PLANS IN WHOLE OR PART, WITHOUT THE WRITTEN PERMISSION OF D.L. HOWELL & ASSOCIATES, INC. IS FORBIDDEN.

LEGEND

EX. PROPERTY LINE	EXISTING CONTOUR	PROP. LIGHT POLE	PROP. ELEC. LINE	PROP. STORM INLET	PROP. WATER LINE
PROP. PROPERTY LINE	PROPOSED CONTOUR	EX. FENCE	EX. UTILITY POLE	PROP. STORM INLET ID	PROP. WATER LATERAL
EX. RIGHT-OF-WAY	EXISTING SPOT ELEV.	EX. MAIL BOX	PROP. UTILITY POLE	PROP. SEEPAGE BED	PROP. FIRE WATER LINE
PROP. RIGHT-OF-WAY	NEW SPOT ELEV.	EX. SIGN	EX. GUY ANCHOR		EX. WATER VALVE
EX. MONUMENT	SOILS TYPE	PROP. SIGN	EX. GAS LINE	EX. SANITARY SEWER LINE	PROP. WATER VALVE
PROP. MONUMENT	SOILS LINE	EXIST. PARKING SPACES	PROP. GAS LINE	PROP. SAN. SEWER LINE	EX. HYDRANT
EX. REBAR	EX. CONC. CURB	PROP. PARKING SPACES	EX. GAS VALVE	PROP. SAN. SEWER LATERAL	PROP. HYDRANT
PROP. REBAR	PROP. CONC. CURB	TO BE REMOVED	PROP. GAS VALVE	EX. MANHOLE	EX. MANHOLE
EX. EASEMENT	EX. EDGE OF PAVING	EX. TELE. LINE	PROP. STORM SEWER LINE	PROP. SANITARY MH. ID	PROP. MANHOLE
PROP. EASEMENT	PROP. EDGE OF PAVING	PROP. TELE. LINE	EX. STORM SEWER LINE	EX. WATER LINE	EX. PERC TEST
EX. WETLANDS	EX. LIGHT POLE	EX. ELEC. LINE	EX. STORM INLET		EX. TEST PIT

PRE-DEVELOPED DRAINAGE AREA PLAN

SCALE: 1"=30'

30 0 15 30 60

GRAPHIC SCALE
1 inch = 30 feet

UPI#: 670003454007

HOWELL ENGINEERING
Local Knowhow. Engineered.
Civil Engineering | Land Planning | Environmental
1250 Wrights Lane, West Chester, PA 19380
Phone: (610) 918-9002 Fax: (610) 918-9003

COMMONWEALTH OF PENNSYLVANIA
REGISTERED PROFESSIONAL
DENNY L. HOWELL
ENGINEER
GS-3006-E

REV.	DATE	DESCRIPTION
1		
2		
3		
4		
5		
6		
7		
8		

GRADING PERMIT

PRE-DEVELOPED DRAINAGE AREA PLAN

CLIENT: A ROSS MYERS
PROJECT: ALLAN MYERS EQUIPMENT MUSEUM
LOCATION: 1805 BERKS ROAD
WORCESTER TOWNSHIP, MONTGOMERY COUNTY, PA

DATE:	03/10/2025
SCALE:	1"=30'
DRAWN BY:	NAR
CHECKED BY:	JSR
PROJECT NO.:	4886
CAD FILE:	06 PCSWM PLAN.dwg
PLOTTED:	03/10/2025
DRAWING NO.:	C05.4
SHEET	09 OF 18

Q:\2018_20 JOBS\4886\4886 PRODUCTION PLANS\SHEET SET\SUBDIVISION & LD\06 PCSWM PLAN.DWG

COPYRIGHT 2021 D.L. HOWELL & ASSOCIATES, INC. - ALL RIGHTS RESERVED. THESE PLANS ARE THE PROPERTY OF D.L. HOWELL & ASSOCIATES, INC. ANY USE OR REPRODUCTION OF THESE PLANS IN WHOLE OR PART, WITHOUT THE WRITTEN PERMISSION OF D.L. HOWELL & ASSOCIATES, INC. IS FORBIDDEN.

LEGEND

	EX. PROPERTY LINE	242	EXISTING CONTOUR		PROP. LIGHT POLE	E	PROP. ELEC. LINE		PROP. STORM INLET	W	PROP. WATER LINE
	PROP. PROPERTY LINE	242	PROPOSED CONTOUR		EX. FENCE		EX. UTILITY POLE		PROP. STORM INLET ID	WL	PROP. WATER LATERAL
	EX. RIGHT-OF-WAY	X 123.00	EXISTING SPOT ELEV.	MB	EX. MAIL BOX		PROP. UTILITY POLE		PROP. SEEPAGE BED	FW	PROP. FIRE WATER LINE
	PROP. RIGHT-OF-WAY	X 123.00	NEW SPOT ELEV.		EX. SIGN		EX. GUY ANCHOR			W.V.	EX. WATER VALVE
	EX. MONUMENT	GEB2	SOILS TYPE		PROP. SIGN		EX. GAS VALVE			W.V.	PROP. WATER VALVE
	PROP. MONUMENT		SOILS LINE	(X)	EXIST. PARKING SPACES	G	PROP. GAS LINE		EX. SANITARY SEWER LINE	F.H.	EX. HYDRANT
	EX. REBAR		EX. CONC. CURB	4	PROP. PARKING SPACES	G.V.	EX. GAS VALVE	S	PROP. SAN. SEWER LINE	F.H.	PROP. HYDRANT
	PROP. REBAR		PROP. CONC. CURB	(TBR)	TO BE REMOVED	G.V.	PROP. GAS VALVE	L	PROP. SAN. SEWER LATERAL		EX. MANHOLE
	EX. EASEMENT		EX. EDGE OF PAVING		EX. TELE. LINE		EX. STORM SEWER LINE	MH 1	PROP. SANITARY MH. ID		PROP. MANHOLE
	PROP. EASEMENT		PROP. EDGE OF PAVING	T	PROP. TELE. LINE		PROP. STORM SEWER LINE				EX. PERC TEST
	EX. WETLANDS		EX. LIGHT POLE	T	EX. ELEC. LINE		EX. STORM INLET		EX. WATER LINE		EX. TEST PIT

UPI#: 670003454007

POST-DEVELOPED DRAINAGE AREA PLAN

SCALE: 1"=30'

30 0 15 30 60

GRAPHIC SCALE
1 inch = 30 feet

HOWELL ENGINEERING
Local Knowhow. Engineered.
Civil Engineering | Land Planning | Environmental
1250 Wrights Lane, West Chester, PA 19380
Phone: (610) 918-9002 Fax: (610) 918-9003

COMMONWEALTH OF PENNSYLVANIA REGISTERED PROFESSIONAL ENGINEER DENNY L. HOWELL

REV.	DATE	DESCRIPTION
1		
2		
3		
4		
5		
6		
7		
8		

GRADING PERMIT

POST-DEVELOPED DRAINAGE AREA PLAN

CLIENT: A ROSS MYERS
PROJECT: ALLAN MYERS EQUIPMENT MUSEUM
LOCATION: 1805 BERKS ROAD WORCESTER TOWNSHIP, MONTGOMERY COUNTY, PA

DATE:	03/10/2025
SCALE:	1"=30'
DRAWN BY:	NAR
CHECKED BY:	JSR
PROJECT NO.:	4886
CAD FILE:	08 PCSWM PLAN.dwg
PLOTTED:	03/10/2025
DRAWING NO.:	C05.5
SHEET	10 OF 18

COPYRIGHT 2021 D.L. HOWELL & ASSOCIATES, INC. - ALL RIGHTS REQUIRED. THESE PLANS ARE THE PROPERTY OF D.L. HOWELL & ASSOCIATES, INC. ANY USE OR REPRODUCTION OF THESE PLANS IN WHOLE OR PART, WITHOUT THE WRITTEN PERMISSION OF D.L. HOWELL & ASSOCIATES, INC. IS FORBIDDEN.

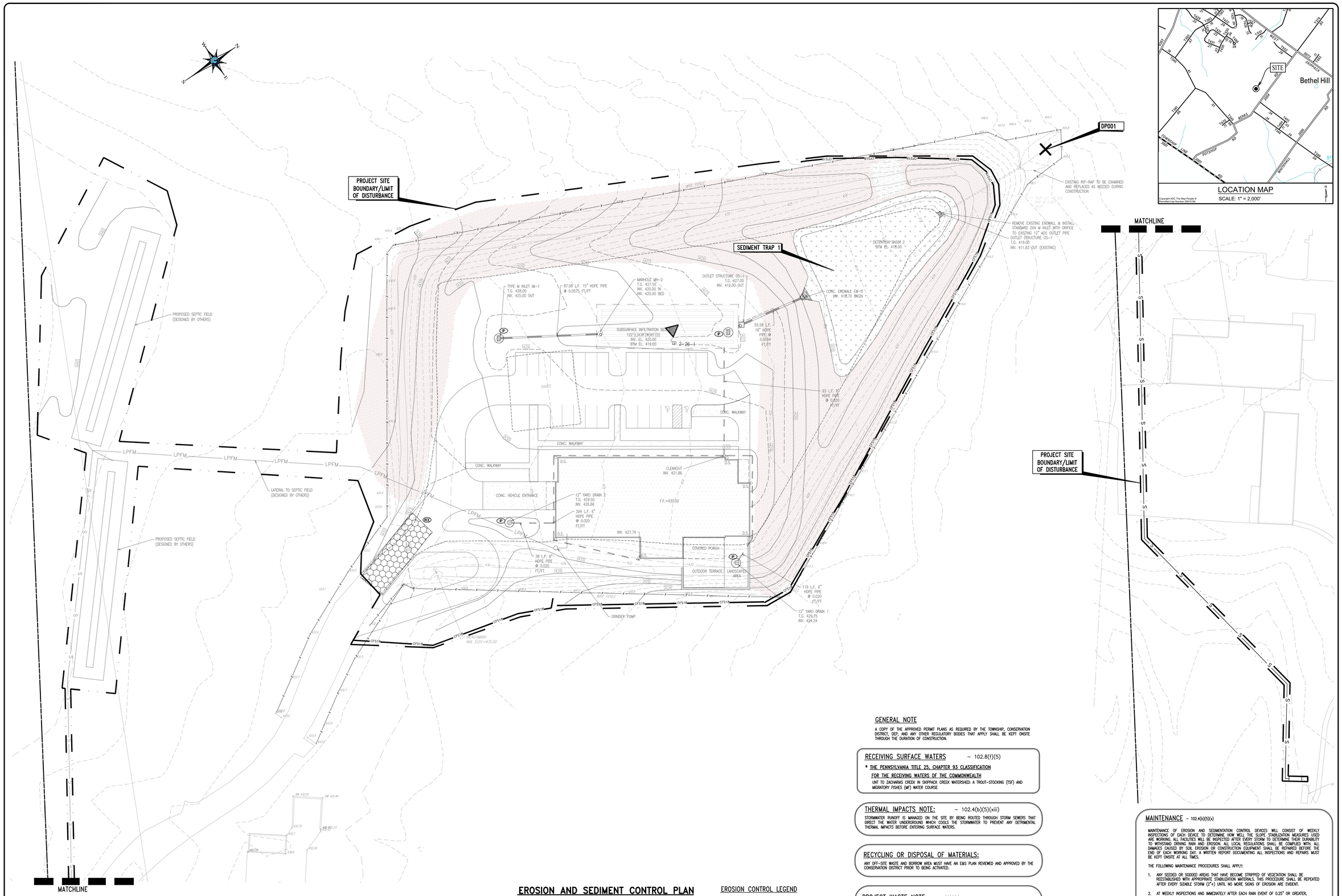

GENERAL NOTE

A COPY OF THE APPROVED PERMIT PLANS AS REQUIRED BY THE TOWNSHIP, CONSERVATION DISTRICT, DEP, AND ANY OTHER REGULATORY BODIES THAT APPLY SHALL BE KEPT ONSITE THROUGH THE DURATION OF CONSTRUCTION.

RECEIVING SURFACE WATERS – 102.8(f)(5)

*** THE PENNSYLVANIA TITLE 25, CHAPTER 93 CLASSIFICATION FOR THE RECEIVING WATERS OF THE COMMONWEALTH**

UNT TO ZACHARIAS CREEK IN SKIPPACK CREEK WATERSHED: A TROUT-STOCKING (TSF) AND MIGRATORY FISHES (MF) WATER COURSE

THERMAL IMPACTS NOTE: – 102.4(b)(5)(xiii)

STORMWATER RUNOFF IS MANAGED ON THE SITE BY BEING ROUTED THROUGH STORM SEWERS THAT DIRECT THE WATER UNDERGROUND WHICH COOLS THE STORMWATER TO PREVENT ANY DETRIMENTAL THERMAL IMPACTS BEFORE ENTERING SURFACE WATERS.

RECYCLING OR DISPOSAL OF MATERIALS:

ANY OFF-SITE WASTE AND BORROW AREA MUST HAVE AN E&S PLAN REVIEWED AND APPROVED BY THE CONSERVATION DISTRICT PRIOR TO BEING ACTIVATED.

PROJECT WASTE NOTE: – 102.4(b)(5)(vi)

THE OPERATOR SHALL REMOVE FROM THE SITE, RECYCLE, OR DISPOSE OF ALL BUILDING MATERIAL AND WASTES IN ACCORDANCE WITH THE DEP'S SOLID WASTE MANAGEMENT REGULATIONS AT 25 PA. CODE 260.1 ET SEQ., 271.1 ET SEQ., AND 287.1 ET SEQ. THE CONTRACTOR SHALL NOT ILLEGALLY BURY, DUMP, OR DISCHARGE ANY BUILDING MATERIAL OR WASTES AT THE SITE.

EROSION AND SEDIMENT CONTROL NARRATIVE – 102.4(b)(4)

THE PURPOSE OF THIS NARRATIVE AND THE EROSION CONTROL ASPECTS OF THE PLANS ARE TO PREVENT THE ACCELERATED EROSION OF EXPOSED SITE SOILS DURING CONSTRUCTION AND TO RETAIN ON SITE ALL SEDIMENT PRODUCED BY CONSTRUCTION ACTIVITIES. THIS WILL BE ACCOMPLISHED BY STRICT ADHERENCE TO THE FOLLOWING NOTES, SEQUENCE OF CONSTRUCTION, AND EROSION AND SEDIMENT CONTROL DETAILS SHOWN ON THE PLAN. THIS PLAN WILL FURTHER ACT TO PROVIDE THE FOLLOWING:

- MINIMIZE EXTENT AND DURATION OF EARTH DISTURBANCE
- MAXIMIZE PROTECTION OF EXISTING DRAINAGE FEATURES AND VEGETATION
- MINIMIZE SOIL COMPACTION
- UTILIZE OTHER MEASURES OR CONTROLS THAT PREVENT OR MINIMIZE GENERATION OF INCREASED STORMWATER RUNOFF

MAINTENANCE – 102.4(b)(5)(x)

MAINTENANCE OF EROSION AND SEDIMENTATION CONTROL DEVICES WILL CONSIST OF WEEKLY INSPECTIONS OF EACH DEVICE TO DETERMINE HOW WELL THE SLOPE STABILIZATION MEASURES USED ARE WORKING. ALL FACILITIES WILL BE INSPECTED AFTER EVERY STORM TO DETERMINE THEIR DURABILITY TO WITHSTAND DRIVING RAIN AND EROSION. ALL LOCAL REGULATIONS SHALL BE COMPLIED WITH. ALL DAMAGES CAUSED BY SOIL EROSION OR CONSTRUCTION EQUIPMENT SHALL BE REPAIRED BEFORE THE END OF EACH WORKING DAY. A WRITTEN REPORT DOCUMENTING ALL INSPECTIONS AND REPAIRS MUST BE KEPT ONSITE AT ALL TIMES.

THE FOLLOWING MAINTENANCE PROCEDURES SHALL APPLY:

1. ANY SEEDED OR SODDED AREAS THAT HAVE BECOME STRIPPED OF VEGETATION SHALL BE REESTABLISHED WITH APPROPRIATE STABILIZATION MATERIALS. THIS PROCEDURE SHALL BE REPEATED AFTER EVERY SIZABLE STORM (2"+) UNTIL NO MORE SIGNS OF EROSION ARE EVIDENT.
2. AT WEEKLY INSPECTIONS AND IMMEDIATELY AFTER EACH RAIN EVENT OF 0.25" OR GREATER, NECESSARY CLEANING WILL BE PERFORMED.
3. ANY COMPOST FILTER SOCK, WHICH HAS BEEN UNDERMINED OR OVER TOPPED, MUST BE IMMEDIATELY REPLACED WITH A ROCK FILTER OUTLET.
4. ANY SEDIMENT REMOVED FROM BMPS DURING CONSTRUCTION WILL BE RETURNED TO UPLAND AREAS ON SITE AND INCORPORATED INTO THE SITE GRADING.

GEOLOGIC FORMATION NOTE:

BEDROCK GEOLOGY					
MAP SYMBOL	NAME	AGE	LITH1	LITH2	LITH3
Trl	Lockatong Formation	Triassic	Argillite	Black Shale	Limestone; calcareous shale

LOCATION OF GEOLOGIC FORMATIONS TAKEN FROM PENNSYLVANIA DEP eMapPA, "BEDROCK GEOLOGY" DEVELOPED BY THE PENNSYLVANIA DEPARTMENT OF ENVIRONMENTAL PROTECTION, GEOSPATIAL DATA CENTER, DATED: DECEMBER 2004.

LEGEND

EX. PROPERTY LINE	EXISTING CONTOUR	PROP. LIGHT POLE	PROP. ELEC. LINE
PROP. PROPERTY LINE	PROPOSED CONTOUR	EX. FENCE	EX. UTILITY POLE
EX. RIGHT-OF-WAY	EXISTING SPOT ELEV.	EX. MAIL BOX	PROP. UTILITY POLE
PROP. RIGHT-OF-WAY	NEW SPOT ELEV.	EX. SIGN	EX. GUY ANCHOR
EX. MONUMENT	SOILS TYPE	PROP. SIGN	EX. GAS LINE
PROP. MONUMENT	SOILS LINE	EXIST. PARKING SPACES	PROP. GAS LINE
EX. REBAR	EX. CONC. CURB	PROP. PARKING SPACES	EX. GAS VALVE
PROP. REBAR	PROP. CONC. CURB	TO BE REMOVED	PROP. GAS VALVE
EX. EASEMENT	EX. EDGE OF PAVING	EX. TELE. LINE	PROP. STORM SEWER LINE
PROP. EASEMENT	PROP. EDGE OF PAVING	PROP. TELE. LINE	EX. STORM SEWER LINE
EX. WETLANDS	EX. LIGHT POLE	EX. ELEC. LINE	EX. STORM INLET

PROP. STORM INLET	PROP. WATER LINE	LIMIT OF DISTURBANCE/PROJECT SITE BOUNDARY	
PROP. STORM INLET ID	PROP. WATER LATERAL	SEDIMENT TRAP DRAINAGE AREA	
PROP. SEEPAGE BED	PROP. FIRE WATER LINE	TEMPORARY GRADING	
EX. SANITARY SEWER LINE	PROP. WATER VALVE	ORANGE CONSTRUCTION FENCE	
PROP. SAN. SEWER LINE	EX. HYDRANT	CSF12	12" COMPOST FILER SOCK
PROP. SAN. SEWER LATERAL	PROP. HYDRANT	CSF18	18" COMPOST FILER SOCK
PROP. SANITARY MH. ID	EX. MANHOLE	TPF	TREE PROTECTION FENCING
EX. WATER LINE	PROP. MANHOLE	TS	TOPSOIL STOCKPILE
	EX. PERC TEST	ROE	STABILIZED ROCK CONSTRUCTION ENTRANCE
	EX. TEST PIT		EROSION CONTROL BLANKET
			RAIN GARDEN/BIO-RETENTION AREA
			SPILLWAY REINFORCEMENT

EROSION AND SEDIMENT CONTROL PLAN

SCALE: #######

50 0 25 50 100

GRAPHIC SCALE
1 inch = 50 feet

SOIL TYPE(S)

ReA – READINGTON SILT LOAM, 0 TO 3 PERCENT SLOPES
20 TO 36 INCHES TO FRAGIPAN
40 TO 70 INCHES TO LITHIC BEDROCK
WATER TABLE – ABOUT 18 TO 36 INCHES

RhA – REAVILLE SILT LOAM, 0 TO 3 PERCENT SLOPES
20 TO 40 INCHES TO LITHIC BEDROCK
WATER TABLE – ABOUT 6 TO 36 INCHES

UPI#: 670003454007

HOWELL ENGINEERING
Local Knowhow. Engineered.
Civil Engineering | Land Planning | Environmental
1250 Wrights Lane, West Chester, PA 19380
Phone: (610) 918-9002 Fax: (610) 918-9003

COMMONWEALTH OF PENNSYLVANIA REGISTERED PROFESSIONAL DENNY L. HOWELL ENGINEER 053056-E

REV.	DATE	DESCRIPTION
1		
2		
3		
4		
5		
6		
7		
8		

GRADING PERMIT

EROSION AND SEDIMENT CONTROL PLAN

CLIENT: A ROSS MYERS
PROJECT: ALLAN MYERS EQUIPMENT MUSEUM
LOCATION: 1805 BERKS ROAD WORCESTER TOWNSHIP, MONTGOMERY COUNTY, PA

DATE:	03/10/2025
SCALE:	1"=30'
DRAWN BY:	NAR
CHECKED BY:	JSR
PROJECT NO.:	4886
CAD FILE:	4886 EROSION AND SEDIMENT CONTROL PLAN.dwg
PLOTTED:	03/10/2025
DRAWING NO.:	C06.1
SHEET	11 OF 18

Q:\2ML 2D JOBS\4886\4886 PRODUCTION PLANS\SHEET SET\SUBDIVISION & LD\11 EROSION AND SEDIMENT CONTROL PLAN.DWG
COPYRIGHT 2021 D.L. HOWELL & ASSOCIATES, INC. – ALL RIGHTS RESERVED. THESE PLANS ARE THE PROPERTY OF D.L. HOWELL & ASSOCIATES, INC. ANY USE OR REPRODUCTION OF THESE PLANS IN WHOLE OR PART, WITHOUT THE WRITTEN PERMISSION OF D.L. HOWELL & ASSOCIATES, INC. IS FORBIDDEN.

EROSION AND SEDIMENTATION CONTROL GENERAL NOTES

1. A COPY OF THE APPROVED EROSION AND SEDIMENT CONTROL PLAN MUST BE AVAILABLE AT THE PROJECT SITE AT ALL TIMES.
2. IF ANY SIGNIFICANT CHANGES ARE TO BE MADE TO THE LIMITS OF DISTURBANCE OR TO THE EROSION AND SEDIMENTATION CONTROL PLAN, THE CONTRACTOR OR LAND OWNER MUST CONTACT THE CONSERVATION DISTRICT AT FOR ADEQUACY OF THESE CHANGES.
3. SHOULD UNFORESEEN EROSIVE CONDITIONS DEVELOP DURING CONSTRUCTION, THE CONTRACTOR MUST TAKE ACTION TO REMEDY SUCH CONDITIONS AND TO PREVENT DAMAGE TO ADJACENT PROPERTIES AS A RESULT OF INCREASED RUNOFF AND OR SEDIMENT DISPLACEMENT. STOCKPILES OF WOOD CHIPS, HAY BALES, CRUSHED STONE AND OTHER MULCHES SHOULD BE HELD IN READINESS TO DEAL IMMEDIATELY WITH EMERGENCY PROBLEMS OF EROSION.
4. SHOULD ANY MEASURES CONTAINED WITHIN THIS PLAN PROVE INCAPABLE OF ADEQUATELY REMOVING SEDIMENT FROM ON-SITE FLOWS PRIOR TO DISCHARGE OR OF STABILIZING THE SURFACES INVOLVED, ADDITIONAL MEASURES MUST BE IMMEDIATELY IMPLEMENTED BY THE CONTRACTOR TO ELIMINATE SUCH PROBLEMS.
5. THE CONTRACTOR IS ADVISED TO BECOME THOROUGHLY FAMILIAR WITH THE PROVISION OF APPENDIX 64, EROSION CONTROL RULES AND REGULATIONS, TITLE 25, PART 1, DEPARTMENT OF ENVIRONMENTAL RESOURCES, SUB-PART C, PROTECTION OF NATURAL RESOURCES, ARTICLE III, WATER RESOURCES, CHAPTER 102, EROSION CONTROL.
6. THE CONTRACTOR MUST DEVELOP AND HAVE APPROVED BY THE CONSERVATION DISTRICT, A SEPARATE EROSION AND SEDIMENTATION CONTROL PLAN FOR EACH SPOIL, BORROW OR OTHER WORK AREA NOT DETAILED IN THE APPROVED PLAN, WHETHER LOCATED WITHIN OR OUTSIDE THE CONSTRUCTION LIMITS.
7. ALL PUMPING OF SEDIMENT LADEN WATER SHALL BE THROUGH A SEDIMENT CONTROL BMP, SUCH AS A PUMPED WATER FILTER BAG OR EQUIVALENT SEDIMENT REMOVAL FACILITY, OVER UNDISTURBED VEGETATED AREAS.
8. LIMITS OF DISTURBANCE MUST BE CLEARLY MARKED IN THE FIELD PRIOR TO ANY DISTURBANCE. ANY CHANGE OR ENCROACHMENT ONTO THESE AREAS WITHOUT CONSERVATION DISTRICT REVIEW AND APPROVAL MAY REQUIRE THE CONTRACTOR TO CEASE DISTURBANCE AND OBTAIN AN EARTH DISTURBANCE PERMIT.
9. UNTIL THE SITE IS STABILIZED, ALL EROSION AND SEDIMENTATION CONTROLS MUST BE MAINTAINED PROPERLY. MAINTENANCE MUST INCLUDE INSPECTIONS OF ALL EROSION AND SEDIMENTATION CONTROLS AFTER EACH STORM EVENT AND ON A WEEKLY BASIS. ALL SITE INSPECTIONS WILL BE DOCUMENTED IN AN INSPECTION LOG KEPT FOR THIS PURPOSE. THE COMPLIANCE ACTIONS AND THE DATE, TIME AND NAME OF THE PERSON CONDUCTING THE INSPECTION. THE INSPECTION LOG WILL BE KEPT ON SITE AT ALL TIMES AND MADE AVAILABLE TO THE DISTRICT UPON REQUEST.

   ALL PREVENTATIVE AND REMEDIAL MAINTENANCE WORK, INCLUDING CLEAN OUT, REPAIR, REPLACEMENT, REGRADING, REMULCHING, RESEEDING, AND RENETTING MUST BE PERFORMED IMMEDIATELY. IF EROSION AND SEDIMENTATION BMP'S FAIL TO PERFORM AS EXPECTED, REPLACEMENT BMP'S OR MODIFICATIONS OF THOSE INSTALLED WILL BE NEEDED.

   WHERE BMP'S ARE FOUND TO FAIL TO ALLEVIATE EROSION OR SEDIMENT POLLUTION THE PERMITTEE OR CO-PERMITTEE SHALL INCLUDE THE FOLLOWING INFORMATION:
   A. THE LOCATION & SEVERITY OF THE BMP'S FAILURE & ANY POLLUTION EVENTS.
   B. ALL STEPS TAKEN TO REDUCE, ELIMINATE & PREVENT THE RECURRENCE OF THE NON-COMPLIANCE.
   C. THE TIME FRAME TO CORRECT THE NONCOMPLIANCE, INCLUDING THE EXACT DATES WHEN THE ACTIVITY WILL RETURN TO COMPLIANCE.
10. UPON COMPLETION OR TEMPORARY CESSATION OF THE EARTH DISTURBANCE ACTIVITY, OR ANY STAGE THEREOF, THE PROJECT SHALL BE IMMEDIATELY STABILIZED WITH THE APPROPRIATE TEMPORARY OR PERMANENT STABILIZATION. ALL AREAS REQUIRING INTERIM OR FINAL STABILIZATION MUST BE ADDRESSED WITH IMMEDIATE STABILIZATION OF DISTURBANCE. AREAS UTILIZING VEGETATIVE STABILIZATION MUST BE SEEDED / PLANTED AND MULCHED IN SUFFICIENT TIME. SEEDING WILL BE ACCOMPLISHED THROUGH THE USE OF CONVENTIONAL SEEDING AND MULCHING AT A RATE OF 3.0 TONS PER ACRE AS RECOMMENDED IN THE PENN STATE AGRONOMY GUIDE. CESSATION OF ACTIVITY FOR 4 DAYS OR LONGER REQUIRES TEMPORARY STABILIZATION.
11. AFTER FINAL STABILIZATION HAS BEEN ACHIEVED, TEMPORARY EROSION AND SEDIMENT BMP'S MUST BE REMOVED. AREAS DISTURBED DURING REMOVAL OF THE BMP'S MUST BE STABILIZED IMMEDIATELY.
12. SEDIMENT MUST BE REMOVED WHEN ACCUMULATIONS REACH 1/2 ABOVE GROUND HEIGHTS OF COMPOST FILTER SOCKS.
13. THE CONTRACTOR WILL BE RESPONSIBLE FOR THE PROPER CONSTRUCTION, STABILIZATION, AND MAINTENANCE OF ALL EROSION AND SEDIMENTATION CONTROLS AND RELATED ITEMS INCLUDED WITH THIS PLAN.
14. IF UNSUITABLE MATERIAL IS ENCOUNTERED DURING CONSTRUCTION, A GEOTECHNICAL ENGINEER SHOULD BE ONSITE FOR RESOLUTIONS TO THE UNSUITABLE SOIL.
15. AN AREA SHALL BE CONSIDERED TO HAVE ACHIEVED FINAL STABILIZATION WHEN IT HAS A MINIMUM UNIFORM 70% PERENNIAL VEGETATIVE COVER OR OTHER PERMANENT NON-VEGETATIVE COVER WITH A DENSITY SUFFICIENT TO RESIST ACCELERATED SURFACE EROSION AND SUBSURFACE CHARACTERISTICS SUFFICIENT TO RESIST SLIDING AND OTHER MOVEMENTS. IMMEDIATELY AFTER EARTH DISTURBANCE ACTIVITIES CEASE, THE OPERATOR SHALL STABILIZE ANY AREAS DISTURBED BY THE ACTIVITIES. DURING NON-GERMINATING PERIODS, MULCH MUST BE APPLIED AT THE SPECIFIED RATES. DISTURBED AREAS WHICH ARE NOT AT FINISHED GRADE AND WHICH WILL BE RE-DISTURBED WITHIN 1 YEAR MUST BE STABILIZED IN ACCORDANCE WITH THE TEMPORARY VEGETATIVE STABILIZATION SPECIFICATIONS. DISTURBED AREAS WHICH ARE AT FINISHED GRADE OR WHICH WILL NOT BE RE-DISTURBED WITHIN 1 YEAR MUST BE STABILIZED IN ACCORDANCE WITH THE PERMANENT VEGETATIVE STABILIZATION SPECIFICATIONS.
16. IF THE CONTRACTOR ENCOUNTERS HIGH WATER TABLE, SHALLOW BEDROCK, OR SOIL INSTABILITY DURING SITE CONSTRUCTION, THE DESIGNATED PROFESSIONAL ENGINEER AND THE ON-SITE GEOTECHNICAL ENGINEER MUST BE CONTACTED IMMEDIATELY FOR CORRECTIVE MEASURES. ADDITIONALLY, THE MONTGOMERY COUNTY CONSERVATION DISTRICT SHALL BE NOTIFIED.
17. A NOTICE OF TERMINATION (N.O.T.) WILL BE REQUIRED TO BE SUBMITTED FOLLOWING APPROVAL OF THE FINAL AS-BUILT PLANS. PRIOR TO ACCEPTING THE N.O.T., THE DEPARTMENT AND/OR CONSERVATION DISTRICT STAFF WILL PERFORM A FINAL INSPECTION TO ENSURE SITE STABILIZATION AND VERIFY ADEQUATE INSTALLATION AND FUNCTION OF STORMWATER BMPS.
18. THE CONTRACTOR IS RESPONSIBLE FOR ENSURING THAT ANY MATERIAL BROUGHT ON SITE IS CLEAN FILL. FORM FP-001 MUST BE RETAINED BY THE PROPERTY OWNER FOR ANY FILL MATERIAL AFFECTED BY A SPILL OR RELEASE OF A REGULATED SUBSTANCE BUT QUALIFYING AS CLEAN FILL DUE TO ANALYTICAL TESTING.
19. AREAS WHICH ARE TO BE TOP-SOILED SHALL BE SCARIFIED TO A MINIMUM DEPTH OF 3 TO 5 INCHES (6 TO 12 INCHES ON COMPACTED SOILS) PRIOR TO PLACEMENT OF TOPSOIL. AREAS TO BE VEGETATED SHALL HAVE A MINIMUM 4 INCHES OF TOPSOIL IN PLACE PRIOR TO SEEDING AND MULCHING, I.E. YARDS.
20. SEDIMENT TRACKED ONTO ANY ROADWAY OR SIDEWALK SHALL BE RETURNED TO THE CONSTRUCTION SITE BY THE END OF EACH WORKDAY, OR AS NEEDED, OR AS DIRECTED BY THE CONSERVATION DISTRICT OR MUNICIPALITY AND DISPOSED OF IN A MANNER DESCRIBED IN THIS PLAN. IN NO CASE SHALL THE SEDIMENT BE WASHED, SHOVELED OR SWEPT INTO ANY ROAD SIDE DITCH, STORM SEWER OR SURFACE WATER.

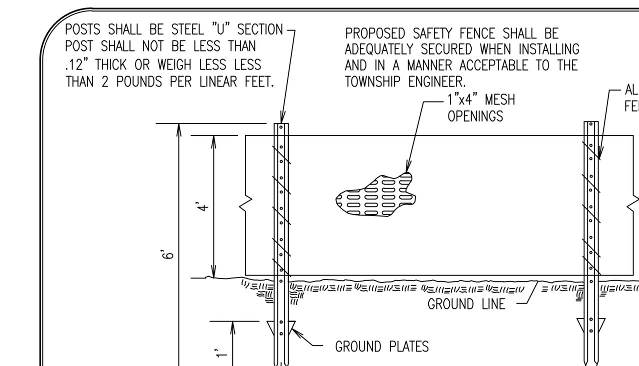

ORANGE CONSTRUCTION FENCE, PLASTIC
NOT TO SCALE

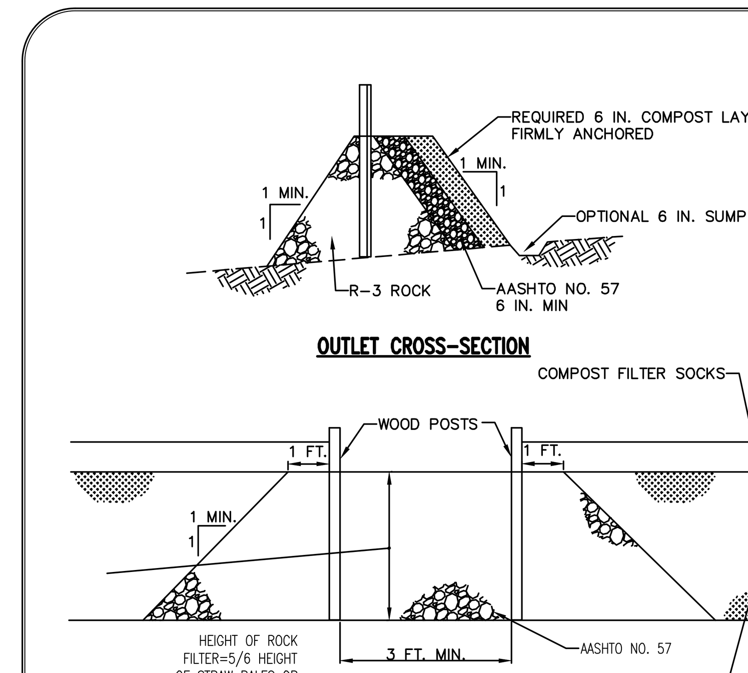

NOTES:

A ROCK FILTER OUTLET SHALL BE INSTALLED WHERE FAILURE OF COMPOST FILTER SOCKS HAS OCCURRED DUE TO CONCENTRATED FLOW. ANCHORED COMPOST LAYER SHALL BE USED ON UPSLOPE FACE IN HQ AND EV WATERSHEDS.

SEDIMENT SHALL BE REMOVED WHEN ACCUMULATIONS REACH 1/3 THE HEIGHT OF THE OUTLET.

STANDARD CONSTRUCTION DETAIL #4-6
ROCK FILTER OUTLET
NOT TO SCALE

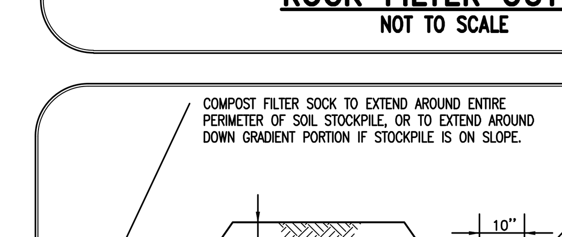

GENERAL NOTES:
1. SEE COMPOST FILTER SOCK DETAIL FOR SOCK INSTALLATION SPECIFICATIONS AND MAINTENANCE REQUIREMENTS.
2. STOCKPILE HEIGHT MUST NOT EXCEED 35-FEET.
3. STOCKPILE SLOPE MUST BE 3:1 OR FLATTER.
4. IF THE STOCKPILE IS TO REMAIN FOR MORE THAN 4 DAYS, IT SHALL BE STABILIZED WITH UNROTTED SMALL GRAIN STRAW OR SALT HAY AT A RATE OF 3 TONS PER ACRE.
5. COMPOST FILTER SOCKS SHALL BE MAINTAINED IN PLACE UNTIL TOPSOIL STOCKPILE HAS BEEN ELIMINATED AND SHALL BE REMOVED ONLY WHEN DIRECTED BY THE MONTGOMERY COUNTY CONSERVATION DISTRICT.

SOIL STOCKPILE DETAIL
NOT TO SCALE

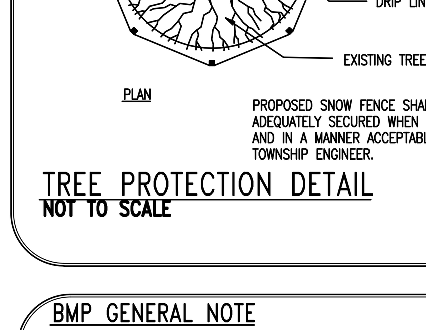

1. WHERE EXISTING GROUND LEVELS ARE CHANGED, DRAINAGE TILE WILL BE PAVED AT THE OLD SOIL LEVEL AND OPEN INTO A WELL BUILT AROUND THE BASE OF THE TREE. SUCH WELL MAY BE LEFT OPEN OR CAN BE FILLED WITH COARSE STONES OR GRAVEL. TILES MAY BE INSTALLED IN A RADIATING PATTERN OR LAID IN PARALLEL LINES.
2. THOSE TREES WHICH HAVE BEEN DELINEATED ON THE PLAN AND ARE WITHIN 25 FEET OF A PROPOSED BUILDING EXCAVATION OR OTHER LOCATIONS DEEMED APPROPRIATE BY THE TOWNSHIP ENGINEER SHALL BE PROTECTED BY INSTALLING AND MAINTAINING A FENCE AT THE DRIP LINE.
3. NO BOARDS OR OTHER MATERIAL SHALL BE NAILED TO TREES DURING CONSTRUCTION.
4. HEAVY EQUIPMENT OPERATORS SHALL AVOID DAMAGING EXISTING TREE TRUNKS AND ROOTS. FEEDER ROOTS SHALL NOT BE CUT CLOSER THAN 25 FEET FROM TREE TRUNKS.
5. TREE TRUNKS AND EXPOSED ROOTS DAMAGED DURING CONSTRUCTION SHALL BE PROTECTED FROM FURTHER DAMAGE BY BEING TREATED IMMEDIATELY.
6. TREE LIMBS DAMAGED DURING CONSTRUCTION SHALL BE PROPERLY PRUNED AND TREATED IMMEDIATELY.
7. THE OPERATIONS OF HEAVY EQUIPMENT OVER ROOT SYSTEMS OF SUCH TREES SHALL BE MINIMIZED IN ORDER TO PREVENT SOIL COMPACTION.
8. DAMAGED TREES SHALL BE FERTILIZED TO AID IN THEIR RECOVERY.
9. CONSTRUCTION DEBRIS SHALL NOT BE DISPOSED OF NEAR OR AROUND THE BASES OF SUCH TREES.

TREE PROTECTION DETAIL
NOT TO SCALE

BMP GENERAL NOTE

UNTIL THE SITE IS STABILIZED, ALL EROSION AND SEDIMENTATION BMP'S MUST BE MAINTAINED PROPERLY. MAINTENANCE MUST INCLUDE INSPECTIONS OF ALL EROSION AND SEDIMENTATION BMP'S AFTER EACH RUNOFF EVENT AND ON A WEEKLY BASIS. ALL SITE INSPECTIONS WILL BE DOCUMENTED IN AN INSPECTION LOG KEPT FOR THIS PURPOSE. THE COMPLIANCE ACTIONS AND THE DATE, TIME AND NAME OF THE PERSON CONDUCTING THE INSPECTION. THE INSPECTION LOG WILL BE KEPT ON SITE AT ALL TIMES AND MADE AVAILABLE TO THE DISTRICT UPON REQUEST. ALL PREVENTATIVE AND REMEDIAL MAINTENANCE WORK, INCLUDING CLEAN OUT, REPAIR, REPLACEMENT, REGRADING, REMULCHING, RESEEDING, AND RENETTING MUST BE PERFORMED IMMEDIATELY. IF EROSION AND SEDIMENTATION BMP'S FAIL TO PERFORM AS EXPECTED, REPLACEMENT BMP'S OR MODIFICATIONS OF THOSE INSTALLED WILL BE NEEDED. WHERE BMP'S ARE FOUND TO FAIL TO ALLEVIATE EROSION OR SEDIMENTATION POLLUTION THE PERMITTEE OR CO-PERMITTEE SHALL INCLUDE THE FOLLOWING INFORMATION:

- THE LOCATION AND SEVERITY OF THE BMP'S FAILURE AND ANY POLLUTION EVENTS.
- ALL STEPS TAKEN TO REDUCE, ELIMINATE AND PREVENT THE RECURRENCE OF THE NON-COMPLIANCE.
- THE TIME FRAME TO CORRECT THE NON-COMPLIANCE, INCLUDING THE EXACT DATES WHEN THE ACTIVITY WILL RETURN TO COMPLIANCE.

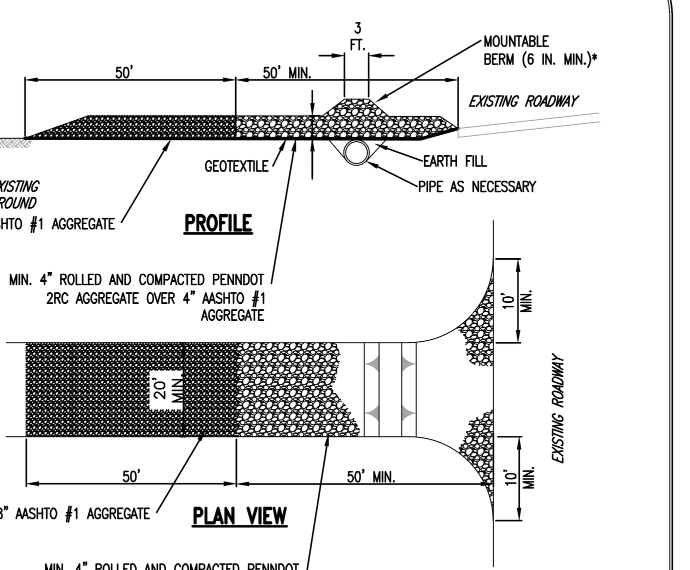

NOTES:

REMOVE TOPSOIL PRIOR TO INSTALLATION OF ROCK CONSTRUCTION ENTRANCE. EXTEND ROCK OVER FULL WIDTH OF ENTRANCE.

RUNOFF SHALL BE DIVERTED FROM ROADWAY TO A SUITABLE SEDIMENT REMOVAL BMP PRIOR TO ENTERING ROCK CONSTRUCTION ENTRANCE.

MOUNTABLE BERM SHALL BE INSTALLED WHEREVER OPTIONAL CULVERT PIPE IS USED AND PROPER PIPE COVER AS SPECIFIED BY MANUFACTURER IS NOT OTHERWISE PROVIDED. PIPE SHALL BE SIZED APPROPRIATELY FOR SIZE OF DITCH BEING CROSSED.

MAINTENANCE: ROCK CONSTRUCTION ENTRANCE THICKNESS SHALL BE CONSTANTLY MAINTAINED TO THE SPECIFIED DIMENSIONS BY ADDING ROCK. A STOCKPILE SHALL BE MAINTAINED ON SITE FOR THIS PURPOSE. ALL SEDIMENT DEPOSITED ON PAVED ROADWAYS SHALL BE REMOVED AND RETURNED TO THE CONSTRUCTION SITE IMMEDIATELY. IF EXCESSIVE AMOUNTS OF SEDIMENT ARE BEING DEPOSITED ON ROADWAY, EXTEND LENGTH OF ROCK CONSTRUCTION ENTRANCE BY 50 FOOT INCREMENTS UNTIL CONDITION IS ALLEVIATED OR INSTALL WASH RACK. WASHING THE ROADWAY OR SWEEPING THE DEPOSITS INTO ROADWAY DITCHES, SEWERS, CULVERTS, OR OTHER DRAINAGE COURSES IS NOT ACCEPTABLE.

ABACT COMPLIANT
ROCK CONSTRUCTION ENTRANCE
NOT TO SCALE

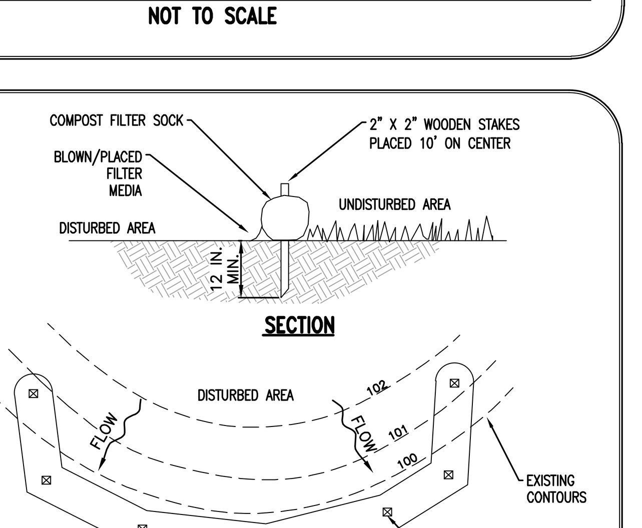

NOTES:

SOCK FABRIC SHALL MEET STANDARDS OF TABLE 4.1 OF THE PA DEP EROSION CONTROL MANUAL. COMPOST SHALL MEET THE STANDARDS OF TABLE 4.2 OF THE PA DEP EROSION CONTROL MANUAL.

COMPOST FILTER SOCK SHALL BE PLACED AT EXISTING LEVEL GRADE. BOTH ENDS OF THE BARRIER SHALL BE EXTENDED AT LEAST 8 FEET UP SLOPE AT 45 DEGREES TO THE MAIN BARRIER ALIGNMENT. MAXIMUM SLOPE LENGTH ABOVE ANY BARRIER SHALL NOT EXCEED THAT SPECIFIED FOR THE SIZE OF THE SOCK AND THE SLOPE OF ITS TRIBUTARY AREA.

TRAFFIC SHALL NOT BE PERMITTED TO CROSS COMPOST FILTER SOCKS.

ACCUMULATED SEDIMENT SHALL BE REMOVED WHEN IT REACHES 1/2 THE ABOVE GROUND HEIGHT OF THE BARRIER AND DISPOSED IN THE MANNER DESCRIBED ELSEWHERE IN THE PLAN.

COMPOST FILTER SOCKS SHALL BE INSPECTED WEEKLY AND AFTER EACH RUNOFF EVENT. DAMAGED SOCKS SHALL BE REPAIRED ACCORDING TO MANUFACTURER'S SPECIFICATIONS OR REPLACED WITHIN 24 HOURS OF INSPECTION.

BIODEGRADABLE COMPOST FILTER SOCKS SHALL BE REPLACED AFTER 6 MONTHS; PHOTODEGRADABLE SOCKS AFTER 1 YEAR. POLYPROPYLENE SOCKS SHALL BE REPLACED ACCORDING TO MANUFACTURER'S RECOMMENDATIONS.

UPON STABILIZATION OF THE AREA TRIBUTARY TO THE SOCK, STAKES SHALL BE REMOVED. THE SOCK MAY BE LEFT IN PLACE AND VEGETATED OR REMOVED. IN THE LATTER CASE, THE MESH SHALL BE CUT OPEN AND THE MULCH SPREAD AS A SOIL SUPPLEMENT.

STANDARD CONSTRUCTION DETAIL #4-1
COMPOST FILTER SOCK
NOT TO SCALE

VEGETATIVE STABILIZATION NOTE

ALL DISTURBED AREAS THAT HAVE NOT OTHERWISE BEEN STABILIZED AND HAVE SIGNIFICANT POTENTIAL FOR EROSION SHOULD BE STABILIZED WITH VEGETATION. THIS INCLUDES GRADED AREAS WHERE IT IS ANTICIPATED THAT FUTURE EARTHMOVING WILL TAKE PLACE WITHIN THE COMING YEAR. AREAS THAT WILL BE SUBJECT TO EARTHMOVING WITHIN 12 MONTHS MAY BE STABILIZED WITH TEMPORARY SEED MIXTURES, PREDOMINANTLY ANNUAL GRASSES. ALL OTHERS SHOULD BE STABILIZED WITH PERMANENT SEED MIXTURES — PREDOMINANTLY PERENNIAL GRASSES. WHEN FINAL GRADE IS ACHIEVED DURING NON-GERMINATING MONTHS, THE AREA SHOULD BE MULCHED UNTIL THE BEGINNING OF THE NEXT PLANTING SEASON. HOWEVER, THE AREA WILL NOT BE CONSIDERED STABILIZED UNTIL A MINIMUM UNIFORM 70% VEGETATIVE COVER OF EROSION RESISTANT PERENNIAL SPECIES HAS BEEN ACHIEVED. CRITICAL AREAS — ERODIBLE SOILS, WITHIN 50 FEET OF A SURFACE WATER — SHOULD BE BLANKETED. TEMPORARY EROSION CONTROL BMPS THAT WERE INSTALLED FOR THE EARTHMOVING PHASE OF THE PROJECT MUST REMAIN IN PLACE AND BE MAINTAINED IN WORKING ORDER UNTIL PERMANENT STABILIZATION IS ACHIEVED. AREAS THAT DO NOT RECEIVE SUFFICIENT SUNLIGHT TO SUPPORT VEGETATION SHOULD BE STABILIZED BY SOME MEANS OTHER THAN VEGETATION.

AS DISTURBED AREAS WITHIN A PROJECT APPROACH FINAL GRADE, PREPARATIONS SHOULD BE MADE FOR SEEDING AND MULCHING TO BEGIN. IN NO CASE SHOULD AN AREA EXCEEDING 15,000 SQUARE FEET, WHICH IS TO BE STABILIZED BY VEGETATION, REACH FINAL GRADE WITHOUT BEING SEEDED AND MULCHED. WAITING UNTIL EARTHMOVING IS COMPLETED BEFORE MAKING PREPARATIONS FOR SEEDING AND MULCHING IS NOT ACCEPTABLE.

BEFORE THE SEEDING BEGINS, TOPSOIL SHOULD BE APPLIED AND ANY REQUIRED SOIL AMENDMENTS WORKED INTO THE SOIL TO A DEPTH OF 4 TO 6 INCHES. IF COMPOST IS TO BE ADDED TO THE TOPSOIL, IT SHOULD BE WORKED INTO THE SOIL WITH THE OTHER SOIL AMENDMENTS UNLESS IT IS BEING APPLIED AS AN EROSION CONTROL BMP.

SEQUENCE OF CONSTRUCTION

1. ALL EARTH DISTURBANCE ACTIVITIES SHALL PROCEED IN ACCORDANCE WITH THE FOLLOWING SEQUENCE. EACH STAGE SHALL BE COMPLETED BEFORE ANY FOLLOWING STAGE IS INITIATED. CLEARING AND GRUBBING SHALL BE LIMITED ONLY TO THOSE AREAS DESCRIBED IN EACH STAGE.
2. AT LEAST 7 DAYS BEFORE STARTING ANY EARTH DISTURBANCE ACTIVITIES, THE OPERATOR SHALL INVITE ALL CONTRACTORS INVOLVED IN THOSE ACTIVITIES, THE LANDOWNER, ALL APPROPRIATE MUNICIPAL OFFICIALS, THE DESIGNATED LICENSED PROFESSIONAL FOR THE EROSION AND SEDIMENTATION CONTROL PLAN, AND A REPRESENTATIVE OF THE CONSERVATION DISTRICT FOR A PRE-CONSTRUCTION MEETING.
3. PRIOR TO THE START OF ANY EARTH DISTURBANCE, STAKE LIMITS OF DISTURBANCE. THE LIMITS OF DISTURBANCE SHOULD CONSIST OF A PHYSICAL BARRIER MARKED BY A SURVEYOR EVERY 2 FEET.
4. INSTALL COMPOST FILTER SOCK DOWNSLOPE OF ALL AREAS TO BE DISTURBED AND ANY TEMPORARY SUMPS. MAINTAIN TEMPORARY EROSION CONTROL MEASURES UNTIL PERMANENT COVER IS ESTABLISHED.
5. INSTALL CONSTRUCTION ENTRANCE AS SHOWN AND DETAILED ON THE PLAN.
6. LIMITED CLEARING SHALL BE PERFORMED FOR PERIMETER CONTROLS. INSTALL THE COMPOST FILTER SOCK AS SHOWN ON THE PLANS AND AS DIRECTED BY THE CONSERVATION DISTRICT. MAINTAIN TEMPORARY CONTROL MEASURES UNTIL PERMANENT COVER IS ESTABLISHED. THE CONTRACTOR WILL INSTALL THE SYSTEMS IN CONFORMANCE WITH THE DETAILS AND MANUFACTURER'S SPECIFICATIONS.
7. EXCAVATE AND CONSTRUCT THE SEDIMENT TRAP COMPLETE WITH EMBANKMENT, KEY TRENCH, OUTLET STRUCTURE, CONCRETE CRADLE, AND RIP RAP OUTLETS. HEAVY EQUIPMENT VEHICLES ARE PROHIBITED FROM TRAVERSING THE BOTTOM AREA OF THE BIORETENTION BASIN. THE SEDIMENT TRAP SHALL BE EXCAVATED TO THE ELEVATIONS PROVIDED ON SHEET C06.1. PLACE WOODEN CLEANOUT STAKE IN SEDIMENT TRAP AND STABILIZE AS SHOWN ON THE PLANS. SEDIMENT TRAP EMBANKMENT MUST BE STABILIZED IMMEDIATELY WITH EROSION CONTROL BLANKETS. SEDIMENT TRAP MUST BE PROTECTED FROM UNAUTHORIZED ACTS OF THIRD PARITES. <u>THIS IS A CRITICAL STAGE WHERE THE DESIGNATED LICENSED PROFESSIONAL MUST BE CONTACTED AT LEAST 48 HOURS IN ADVANCE TO PROVIDE CONSTRUCTION OVERSIGHT.</u>

   NOTE: ALL EROSION AND SEDIMENT CONTROLS MUST BE COMPLETELY CONSTRUCTED AND STABILIZED PRIOR TO DISTURBANCE OF THE TRIBUTARY AREA TO THEM.
8. ONCE EROSION CONTROLS HAVE BEEN INSTALLED, REMOVE EXISTING PROPERTY FEATURES IN ACCORDANCE WITH THE DEMOLITION PLAN.
9. CLEAR SITE WITHIN THE PROPOSED BUILDING AND PAVING AREAS.
10. BEGIN ROUGH GRADING FOR PROPOSED BUILDING AND PAVING.
11. INSTALL STORM SEWER PIPING ACROSS THE SITE TO THE PROPOSED BIORETENTION BASIN.
12. CONSTRUCT BUILDING AND INSTALL UNDERGROUND UTILITIES SUCH AS WATER SERVICES, ELECTRIC, GAS, COMMUNICATIONS, ETC. THE WATER AND SEWER LINES SHALL BE EXCAVATED, INSTALLED, BACKFILLED AND STABILIZED ON A DAILY BASIS, WITH ONLY AS MUCH EXCAVATED AS CAN BE BACKFILLED AND STABILIZED EACH WORKING DAY.
13. CONSTRUCT PARKING AREAS AND SIDEWALK AREAS.
15. PROVIDE FOUR (4) TO EIGHT (8) INCHES OF TOPSOIL ON ALL REMAINING DISTURBED AREAS, SEED AND MULCH AREAS AS NEEDED. ALL TOPSOIL PLACEMENT, SEEDING, SOIL SUPPLEMENTS, AND/OR MULCHING SHALL BE COMPLETED IN ACCORDANCE WITH THE STANDARDS FOR EROSION AND SEDIMENT POLLUTION CONTROL IN PENNSYLVANIA.
18. UPON COMPLETION OF CONSTRUCTION ACTIVITIES, ALL DISTURBED AREAS WILL BE STABILIZED. ONCE DISTURBED AREAS HAVE BEEN STABILIZED, AND THERE ARE NO SIGNS OF FUTURE EROSION EVIDENT, REMOVE ALL TEMPORARY EROSION CONTROL STRUCTURES.
19. ONCE PARKING AREAS AND FINAL GRADING HAVE BEEN COMPLETED, REMOVE THE SEDIMENT FROM THE SEDIMENT TRAP AND BEGIN CONVERSION TO THE BIORETENTION BASIN PER THE APPROVED PLANS.<u>THIS IS A CRITICAL STAGE WHERE THE DESIGNATED LICENSED PROFESSIONAL MUST BE CONTACTED AT LEAST 48 HOURS IN ADVANCE TO PROVIDE CONSTRUCTION OVERSIGHT.</u>
20. BEGIN INSTALLATION OF LANDSCAPING AS SHOWN ON THE LANDSCAPE PLANS. <u>THIS IS A CRITICAL STAGE WHERE THE DESIGNATED LICENSED PROFESSIONAL MUST BE CONTACTED AT LEAST 48 HOURS IN ADVANCE TO PROVIDE CONSTRUCTION OVERSIGHT.</u>
21. THE PROJECT ENGINEER SHALL INSPECT ALL STORMWATER BMPS POST-CONSTRUCTION TO ENSURE THEY HAVE NOT BEEN IMPACTED BY CONSTRUCTION ACTIVITIES. AT THIS TIME, AND THIS TIME ONLY, SHALL THE UNDERDRAIN WITHIN THE BIORETENTION BASIN WITH MRC BE UN-SEALED, CLEARED OF ANY DEBRIS, AND OPENED TO RECEIVE RUNOFF. <u>THIS IS A CRITICAL STAGE WHERE THE DESIGNATED LICENSED PROFESSIONAL MUST BE CONTACTED AT LEAST 48 HOURS IN ADVANCE TO PROVIDE CONSTRUCTION OVERSIGHT.</u>
22. ONCE THE SITE IS PERMANENTLY STABILIZED, AND ALL BMPS ARE INSTALLED IN ACCORDANCE TO THE APPROVED PLAN, THE PERMITEE SHALL SUBMIT A NOTICE OF TERMINATION (NOT) TO THE DEPARTMENT OR AUTHORIZED CONSERVATION DISTRICT.

TOPSOIL APPLICATION

GRADED AREAS SHOULD BE SCARIFIED OR OTHERWISE LOOSENED TO A DEPTH OF 3 TO 5 INCHES TO PERMIT BONDING OF THE TOPSOIL TO THE SURFACE AREAS AND TO PROVIDE A ROUGHENED SURFACE TO PREVENT TOPSOIL FROM SLIDING DOWN SLOPE.

TOPSOIL SHOULD BE UNIFORMLY DISTRIBUTED ACROSS THE DISTURBED AREA TO A DEPTH OF 4 TO 8 INCHES MINIMUM (SEE TABLE 11.1 BELOW) - 2 INCHES ON FILL OUTSLOPES. SPREADING SHOULD BE DONE IN SUCH A MANNER THAT SODDING OR SEEDING CAN PROCEED WITH A MINIMUM OF ADDITIONAL PREPARATION OR TILLAGE. IRREGULARITIES IN THE SURFACE RESULTING FROM TOPSOIL PLACEMENT SHOULD BE CORRECTED IN ORDER TO PREVENT FORMATION OF DEPRESSIONS UNLESS SUCH DEPRESSIONS ARE PART OF THE PCSM PLAN.

TOPSOIL SHOULD NOT BE PLACED WHILE THE TOPSOIL OR SUBSOIL IS IN A FROZEN OR MUDDY CONDITION, WHEN THE SUBSOIL IS EXCESSIVELY WET, OR IN A CONDITION THAT MAY OTHERWISE BE DETRIMENTAL TO PROPER GRADING AND SEEDBED PREPARATION. COMPACTED SOILS SHOULD BE SCARIFIED 6 TO 12 INCHES ALONG CONTOUR WHEREVER POSSIBLE PRIOR TO SEEDING.

SEEDING, MULCHING AND SODDING

ALL SEEDING, MULCHING AND SODDING SHALL BE DONE IN ACCORDANCE WITH THE SPECIFICATIONS OF THE MONTGOMERY COUNTY CONSERVATION DISTRICT. ALL SLOPES STEEPER THAN 5H:1V SHALL BE STABILIZED WITH EITHER SOD OR PERMANENT SEEDING AND MULCH ANCHORED IN PLACE WITH JUTE NETTING. NO SLOPES SHALL BE STEEPER THAN 2H:1V.

TEMPORARY AND PERMANENT SEEDING SHALL BE IN ACCORDANCE WITH THE PENN STATE AGRONOMY GUIDE OR AS RECOMMENDED BELOW. DURING NON-GERMINATING PERIODS APPLY MULCH AT THE RATES RECOMMENDED BELOW.

SHOULD UNFORESEEN EROSIVE CONDITIONS DEVELOP DURING CONSTRUCTION, THE CONTRACTOR SHALL TAKE ACTION TO REMEDY SUCH CONDITIONS AND TO PREVENT DAMAGE TO ADJACENT/DOWN GRADIENT PROPERTIES AS A RESULT OF INCREASED SEDIMENT DISPLACEMENT. STOCKPILES OF WOOD CHIPS, HAY BALES, CRUSHED STONE AND/OR OTHER MULCHES SHALL BE HELD IN READINESS TO DEAL IMMEDIATELY WITH EMERGENCY PROBLEMS OF EROSION.

<u>TEMPORARY SEEDING SPECIFICATIONS</u>

WHERE IT IS NOT POSSIBLE TO PERMANENTLY STABILIZE A DISTURBED AREA IMMEDIATELY AFTER THE FINAL EARTH MOVING HAS BEEN COMPLETED, TEMPORARY SEEDING SHALL BE DONE IMMEDIATELY IN ACCORDANCE TO THE E&S MANUAL AND/OR THE PENN STATE AGRONOMY GUIDE.

AREAS TO BE STABILIZED MUST BE SEEDED/PLANTED IN SUFFICIENT TIME TO GERMINATE, AT LEAST 4 TO 6 WEEKS OF GROWTH PRIOR TO HARD FROSTS. AFTER SEEDING IS COMPLETE, MULCH THE SEEDED AREAS WITH UNROTTED SMALL GRAIN STRAW AT A RATE OF 3 TONS PER ACRE.

SITE PREPARATION: APPLY 1 TON AGRICULTURAL GRADE LIMESTONE (EQUIVALENT TO 40 LBS. PER 1000 S.F.) PER ACRE PLUS 10-10-10 FERTILIZER AT A RATE 500 LBS. (EQUIVALENT TO 12.5 LBS. PER 1000 S.F.) PER ACRE AND WORK IN WHERE POSSIBLE. SECURE A SOIL TEST BEFORE MAKING A PERMANENT SEEDING. AFTER SEEDING, MULCH WITH STRAW AT A RATE OF 3.0 TONS PER ACRE.

TEMPORARY SEED MIXTURE: APPLY ANNUAL RYE GRASS AT 40 PLS (LBS/ACRE) (EQUIVALENT TO 1 LBS. PER 1000 S.F.) MINIMUM GERMINATION PERCENTAGE - 85%

<u>PERMANENT SEEDING SPEFICATIONS</u>
* LIMESTONE - RAW, GROUND AGRICULTURAL LIMESTONE CONTAINING MORE THAN 90% CARBONATES. - USE 2480 LBS. PER 1,000 S.Y.
* COMMERCIAL FERTILIZER (10-10-20) - USE 210 LBS. PER 1,000 S.Y. MIXED INTO THE SEEDBED PRIOR TO SEEDING.
* MULCH - CLEAN OAT OR STRAW SHALL BE FREE FROM MATURE SEED-BEARING STALKS OR ROOTS OF PROHIBITED OR NOXIOUS WEEDS. APPLY AT A RATE OF 3.0 TONS PER ACRE. THE MULCH SHOULD BE STABILIZED UNTIL THE VEGETATIVE COVER IS ESTABLISHED. SPREAD MULCH UNIFORMLY IN A LOOSE LAYER 1/2" TO 1" DEEP. MULCH ANCHORING (MULCH NETTING, PEG AND TWINE, LIQUID MULCH BINDER) SHALL BE ACCOMPLISHED IMMEDIATELY AFTER MULCH PLACEMENT TO MINIMIZE LOSS BY WIND OR WATER.
* SEED MIXTURE - SHALL BEAR A GUARANTEED STATEMENT OF ANALYSIS.

LAWN AND MOWED AREAS:	(PLS = PURE LIVE SEED PERCENTAGE)		MIN. GERMINATION %'S
A. KENTUCKY BLUEGRASS	30 PLS (LBS/ACRE)	12 OZ. PER 1,000 S.F.	75%
PERENNIAL RYEGRASS	20 PLS (LBS/ACRE)	8 OZ. PER 1,000 S.F.	85%
REDTOP	3 PLS (LBS/ACRE)	2 OZ. PER 1,000 S.F.	80%
B. PENNLAWN-FINE FESCUE	40 PLS (LBS/ACRE)	16 OZ. PER 1,000 S.F.	85%
PERENNIAL RYEGRASS	20 PLS (LBS/ACRE)	8 OZ. PER 1,000 S.F.	85%
REDTOP	3 PLS (LBS/ACRE)	2 OZ. PER 1,000 S.F.	80%
SLOPES OR UN-MOWED AREAS:			
C. ERNST CONSERVATION SEEDS SEED MIX: ERNMX-153	20 PLS (LBS/ACRE)	16 OZ. PER 1,000 S.F.	85%

AREAS TO BE STABILIZED MUST BE SEEDED/PLANTED IN SUFFICIENT TIME TO GERMINATE, AT LEAST 4 TO 6 WEEKS OF GROWTH PRIOR TO HARD FROSTS. AFTER SEEDING IS COMPLETE, MULCH THE SEEDED AREAS WITH UNROTTED SMALL GRAIN STRAW AT A RATE OF 3 TONS PER ACRE.

PERMANENT SEEDING SHALL ONLY OCCUR DURING THE DATES LISTED ABOVE. IF AREAS ARE PREPARED FOR SEEDING AT OTHER TIMES, THEN THE PREPARED SEEDBED SHALL BE HEAVILY MULCHED WITH CLEAN UNROTTED SMALL GRAIN STRAW OR SALT HAY AT A RATE OF 3 TONS PER ACRES. THE MULCH SHALL REMAIN IN PLACE UNTIL SEEDING DATES ARE APPROPRIATE. THE MULCH SHALL BE REMOVED; THE AREA SHALL BE DRESSED, SEEDED AND REMULCHED AS DESCRIBED ABOVE.

ALL DISTURBED AREAS REQUIRING FINAL STABILIZATION MUST BE ADDRESSED IMMEDIATELY.

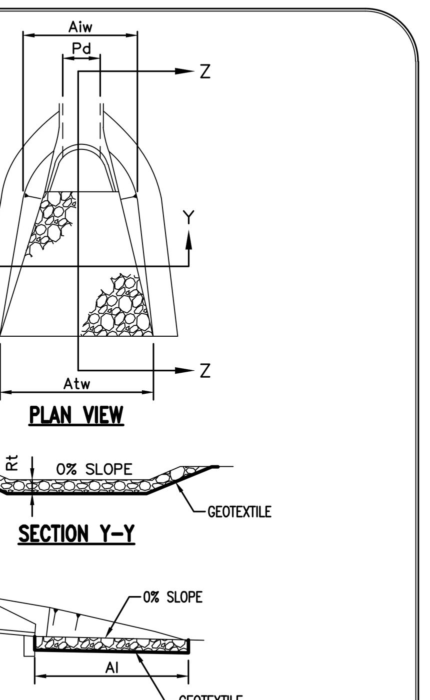

OUTLET NO.	PIPE DIA Pd (IN)	RIPRAP SIZE R-_	RIPRAP THICK. Rt (IN)	APRON LENGTH Al (FT)	APRON INITIAL WIDTH Aiw (FT)	APRON TERMINAL WIDTH Atw (FT)
EW-3	15	R-5	27	9	3.75	7.35

NOTES:

ALL APRONS SHALL BE CONSTRUCTED TO THE DIMENSIONS SHOWN. TERMINAL WIDTHS SHALL BE ADJUSTED AS NECESSARY TO MATCH RECEIVING CHANNELS.

ALL APRONS SHALL BE INSPECTED AT LEAST WEEKLY AND AFTER EACH RUNOFF EVENT. DISPLACED RIPRAP WITHIN THE APRON SHALL BE REPLACED IMMEDIATELY.

STANDARD CONSTRUCTION DETAIL #9-1
RIPRAP APRON AT PIPE OUTLET
WITH FLARED END SECTION OR ENDWALL
NOT TO SCALE

SOIL USE LIMITATIONS AND RESOLUTIONS

1. <u>CUTBANKS CAVE</u>

SOILS SUBJECT TO CUT BANKS & CAVE: APPROPRIATE PRECAUTIONS SHOULD BE TAKEN TO SAFEGUARD WORKERS DURING ALL TRENCHING AND EXCAVATION OPERATIONS. ALL APPLICABLE OSHA STANDARDS AND REGULATIONS MUST BE IMPLEMENTED AT ALL TIMES. THE CONTRACTOR TO UTILIZE TRENCH BOXES FOR ALL UTILITY PIPING INSTALLATIONS.

2. <u>CORROSIVE TO CONCRETE & STEEL</u>

SUITABLE PRECAUTIONS SHOULD BE TAKEN TO PROTECT ALL UNDERGROUND PIPES, CONDUITS, AND STORAGE TANKS. THE CONTRACTOR TO USE EPOXY COATED STEEL AND REBAR FOR ALL SUBSURFACE INSTALLATIONS. FOR BELOW GRADE CONCRETE INSTALLATIONS, THE CONTRACTOR TO, AT MINIMUM, APPLY BITUMINOUS COATING TO ALL SUBSURFACE CONCRETE OR APPLY ADHESIVE BARRIER (I.E., RUBBER MEMBRANE, ETC.) AS WARRANTED BY ACTUAL SOIL CONDITIONS.

3. <u>EASILY ERODIBLE</u>

TYPES EXHIBITING K VALUES GREATER THAN 0.36 OR PLASTICITY INDEX VALUES LOWER THAN 10, LIMIT VEGETATIVE STABILIZATION OF CHANNELS. RESOLUTIONS: TEMPORARY CHANNEL LINING, PROVIDING PERMANENT CHANNEL LINING, DECREASING CHANNEL GRADE, INCREASING CHANNEL WIDTH, SELECTION VEGETATIVE WITH GREATER RETARDANCE, SELECTING PERMANENT LININGS OTHER THAN GRASSES, AND IMPLEMENTING COMBINATION OF THESE AND OTHER METHODS.

4. <u>HYDRIC/HYDRIC INCLUSIONS</u>

SITE CONSTRUCTION/EARTHMOVING IS RECOMMENDED TO OCCUR IN SUMMER OR FALL. SPRING CONSTRUCTION SHOULD BE AVOIDED WHERE POSSIBLE UNLESS ON-SITE DATA INDICATES OTHERWISE, IT SHOULD BE ASSUMED THAT EXCAVATIONS INTO THESE SOILS WILL ENCOUNTER WATER AND APPROPRIATE MEANS SHOULD BE PROVIDED TO HANDLE THAT WATER. CONTRACTOR MAY ALSO INSTALL PERFORATED UNDERDRAIN TO PROTECT BELOW-GRADE INSTALLATIONS AS MAY BE RECOMMENDED BY A DESIGNATED LICENSED PROFESSIONAL, PADEP, OR COUNTY CONSERVATION DISTRICT. WATER TO BE PUMPED TO A DEWATERING STRUCTURE, SEE DETAIL ALL PROPOSED SUMP PUMP DISCHARGES SHALL DISCHARGE TO A WELL VEGETATED AREA TO ALLOW FOR MAXIMUM INFILTRATION PRIOR TO ENTERING STORMWATER MANAGEMENT FACILITIES.

5. <u>SLOW PERCOLATION</u>

PROPOSED INFILTRATION IN THESE AREAS SHALL BE MINIMIZED WITHOUT ADEQUATE SOILS TESTING.

6. <u>FROST ACTION</u>

ADEQUATE COMPACTION OF SOIL IS REQUIRED FOR THE EMBANKMENTS, PIPE BACKFILL, ROAD CONSTRUCTION AND THE BUILDING PADS. IF ADEQUATE COMPACTION CANNOT BE ACHIEVED DUE TO FROST ACTION OR WET SOIL TYPE, EITHER SOIL SHOULD BE IMPORTED FROM OTHER AREAS ON SITE OR CONSTRUCTION OF THESE FACILITIES SHOULD NOT BE WORKED ON DURING PERIODS PRONE TO FROST. THE COUNTY CONSERVATION DISTRICT MUST APPROVE ANY DEVIATION FROM THE E&SC SEQUENCE.

7. <u>DROUGHTY</u>

SOILS SUSCEPTIBLE TO DROUGHTY CONDITIONS SHALL BE MONITORED DURING CONSTRUCTION AND PROPER DUST CONTROLS SHALL BE IMPLEMENTED DURING DRY CONDITIONS.

8. <u>DEPTH TO SATURATION ZONE/SEASONAL WATER TABLE</u>

SITE CONSTRUCTION/EARTHMOVING IS RECOMMENDED TO OCCUR IN SUMMER OR FALL SPRING CONSTRUCTION SHOULD BE AVOIDED WHERE POSSIBLE. UNLESS ON-SITE DATA INDICATES OTHERWISE, IT SHOULD BE ASSUMED THAT EXCAVATIONS INTO THESE SOILS WILL ENCOUNTER WATER AND APPROPRIATE MEANS SHOULD BE PROVIDED TO HANDLE THAT WATER. UNANTICIPATED SPRINGS AND SEEPS INTERCEPTED DURING EXCAVATION OF BASINS OR TRAPS SHOULD BE SAFELY CONVEYED AROUND THE BASIN/TRAP TO A SUITABLE DOWN GRADIENT DISCHARGE POINT. CONTRACTOR MAY ALSO INSTALL PERFORATED UNDERDRAIN TO PROTECT BELOW-GRADE INSTALLATIONS AS MAY BE RECOMMENDED BY DESIGN ENGINEER, PADEP, OR COUNTY CONSERVATION DISTRICT. WATER TO BE PUMPED TO A DEWATERING STRUCTURE, SEE DETAIL ALL PROPOSED SUMP PUMP DISCHARGES SHALL DISCHARGE TO A WELL VEGETATED AREA TO ALLOW FOR MAXIMUM INFILTRATINO PRIOR TO ENTERING STORMWATER MANAGEMENT FACILITIES.

9. <u>LOW STRENGTH</u>

PRECAUTIONS SHOULD BE TAKEN TO PREVENT SLOPE FAILURES DUE TO IMPROPER CONSTRUCTION PRACTICES SUCH AS OVER-STEEPENING AND OVERLOADING OF SLOPES, REMOVAL OF LATERAL SUPPORT, AND FAILURE TO PREVENT SATURATION OF SLOPES. SETBACKS SHOULD COMPLY WITH THE STANDARDS IN CHAPTER 16 OF THE MARCH 2012 EROSION CONTROL MANUAL UNLESS IT CAN BE SHOWN THAT PROPOSED CUTS AND FILLS DO NOT POSE A HAZARD TO PUBLIC SAFETY OR TO SURFACE WATERS. ALSO, ROAD FILL MATERIAL WILL LIKELY NEED TO BE IMPORTED IN AREAS WHERE SOILS HAVE LOW STRENGTH

10. <u>PIPING</u>

THE CONTRACTOR SHALL INSTALL ANTI-SEEP COLLARS OR TRENCH PLUGS AS RECOMMENDED BY DESIGN ENGINEER, PADEP, OR COUNTY CONSERVATION DISTRICT AND SEAL ALL PIPE JOINTS WATERTIGHT.

11. <u>POOR SOURCE OF TOPSOIL</u>

IDENTIFYING AND RESOLVING CHARACTERISTICS, THAT RENDER SOIL TYPES POORLY SUITED AS TOPSOIL. SOIL SHOULD BE IMPORTED FROM OTHER AREAS ON SITE. THE MONTGOMERY COUNTY CONSERVATION DISTRICT MUST APPROVE ANY DEVIATION FROM THE E&SC SEQUENCE.

12. <u>WETNESS</u>

TO RESOLVE THIS LIMITATION VEGETATIVE SPECIES THAT ARE TOLERANT TO WET CONDITIONS SHOULD BE SELECTED FOR LANDSCAPING.

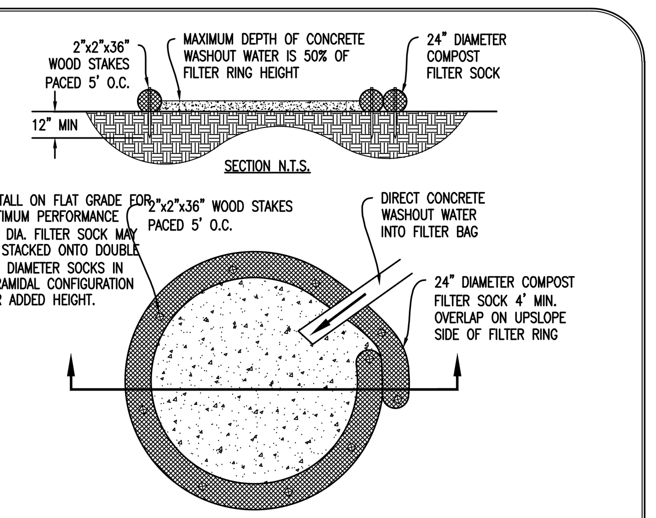

NOTES:
1. INSTALL ON FLAT GRADE FOR OPTIMUM PERFORMANCE
2. 18" DIA. FILTER SOCK MAY BE STACKED ONTO DOUBLE 24" DIAMETER SOCKS IN PYRAMIDAL CONFIGURATION FOR ADDED HEIGHT.

FILTREXX SEDIMENT CONTROLS

CONTACT: JAMES WEAVER
WEAVER'S MULCH
STRASBURG ROAD,
COATESVILLE, PA 19320

PHONE: 610-383-6818

GENERAL NOTES:
1. WASHOUT FACILITIES SHOULD NOT BE PLACED WITHIN 50 FEET OF STORM DRAINS, OPEN DITCHES, OR SURFACE WATERS.
2. WASHOUT FACILITIES SHOULD BE IN A CONVENIENT LOCATION FOR THE TRUCKS, PREFERABLY NEAR THE PLACE WHERE THE CONCRETE IS BEING POURED, BUT FAR ENOUGH FROM OTHER VEHICULAR TRAFFIC TO MINIMIZE THE POTENTIAL FOR ACCIDENTAL DAMAGE OR SPILLS. WHEREVER POSSIBLE, THEY SHOULD BE LOCATED ON SLOPES NOT EXCEEDING A 2% GRADE.
3. COMPOST SOCKS SHOULD BE STAKED IN THE MANNER RECOMMENDED BY THE MANUFACTURER AROUND PERIMETER OF THE GEOMEMBRANE SO AS TO FORM A RING WITH THE ENDS OF THE SOCK LOCATED AT THE UPSLOPE CORNER. CARE MUST BE TAKEN TO ENSURE CONTINUOUS CONTACT OF THE SOCK WITH THE GEOMEMBRANE AT ALL LOCATIONS. WHERE NECESSARY, SOCKS MAY BE STACKED AND STAKED SO AS TO FORM A TRIANGULAR CROSS-SECTION.
4. PROPER SIGNAGE SHOULD BE PROVIDED TO DRIVERS SO THAT THEY ARE AWARE OF THE PRESENCE OF WASHOUT FACILITIES.

COMPOST SOCK WASHOUT DETAIL
NOT TO SCALE

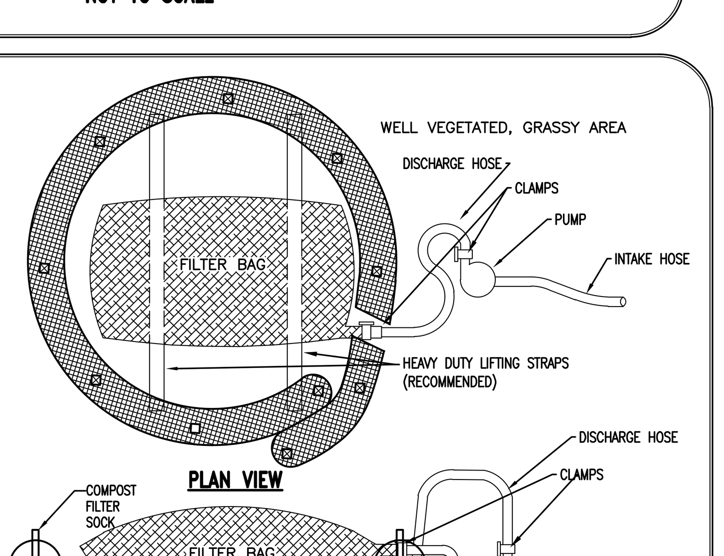

NOTES:

LOW VOLUME FILTER BAGS SHALL BE MADE FROM NON-WOVEN GEOTEXTILE MATERIAL SEWN WITH HIGH STRENGTH, DOUBLE STITCHED "J" TYPE SEAMS. THEY SHALL BE CAPABLE OF TRAPPING PARTICLES LARGER THAN 150 MICRONS. HIGH VOLUME FILTER BAGS SHALL BE MADE FROM WOVEN GEOTEXTILES THAT MEET THE FOLLOWING STANDARDS:

PROPERTY	TEST METHOD	MINIMUM STANDARD
AVG. WIDE WIDTH STRENGTH	ASTM D-4884	60 LB/IN
GRAB TENSILE	ASTM D-4632	205 LB
PUNCTURE	ASTM D-4833	110 LB
MULLEN BURST	ASTM D-3786	350 PSI
UV RESISTANCE	ASTM D-4355	70%
AOS % RETAINED	ASTM D-4751	80 SIEVE

A SUITABLE MEANS OF ACCESSING THE BAG WITH MACHINERY REQUIRED FOR DISPOSAL PURPOSES SHALL BE PROVIDED. FILTER BAGS SHALL BE REPLACED WHEN THEY BECOME 1/2 FULL OF SEDIMENT. SPARE BAGS SHALL BE KEPT AVAILABLE FOR REPLACEMENT OF THOSE THAT HAVE FAILED OR ARE FILLED. BAGS SHALL BE PLACED ON STRAPS TO FACILITATE REMOVAL UNLESS BAGS COME WITH LIFTING STRAPS ALREADY ATTACHED.

BAGS SHALL BE LOCATED IN WELL-VEGETATED (GRASSY) AREA, AND DISCHARGE ONTO STABLE, EROSION RESISTANT AREAS. WHERE THIS IS NOT POSSIBLE, A GEOTEXTILE UNDERLAYMENT AND FLOW PATH SHALL BE PROVIDED. BAGS MAY BE PLACED ON FILTER STONE TO INCREASE DISCHARGE CAPACITY. BAGS SHALL NOT BE PLACED ON SLOPES GREATER THAN 5%. FOR SLOPES EXCEEDING 5%, CLEAN ROCK OR OTHER NON-ERODIBLE AND NON-POLLUTING MATERIAL MAY BE PLACED UNDER THE BAG TO REDUCE SLOPE STEEPNESS.

NO DOWNSLOPE SEDIMENT BARRIER IS REQUIRED FOR MOST INSTALLATIONS. COMPOST BERM OR COMPOST FILTER SOCK SHALL BE INSTALLED BELOW BAGS LOCATED IN HQ OR EV WATERSHEDS, WITHIN 50 FEET OF ANY RECEIVING SURFACE WATER OR WHERE GRASSY AREA IS NOT AVAILABLE.

THE PUMP DISCHARGE HOSE SHALL BE INSERTED INTO THE BAGS IN THE MANNER SPECIFIED BY THE MANUFACTURER AND SECURELY CLAMPED. A PIECE OF PVC PIPE IS RECOMMENDED FOR THIS PURPOSE.

THE PUMPING RATE SHALL BE NO GREATER THAN 750 GPM OR 1/2 THE MAXIMUM SPECIFIED BY THE MANUFACTURER, WHICHEVER IS LESS. PUMP INTAKES SHALL BE FLOATING AND SCREENED.

FILTER BAGS SHALL BE INSPECTED DAILY. IF ANY PROBLEM IS DETECTED, PUMPING SHALL CEASE IMMEDIATELY AND NOT RESUME UNTIL THE PROBLEM IS CORRECTED.

STANDARD CONSTRUCTION DETAIL #3-16
PUMPED WATER FILTER BAG
NOT TO SCALE

HOWELL ENGINEERING
Local Knowhow. Engineered.
Civil Engineering | Land Planning | Environmental
1250 Wrights Lane, West Chester, PA 19380
Phone: (610) 918-9002 Fax: (610) 918-9003

COMMONWEALTH OF PENNSYLVANIA
REGISTERED PROFESSIONAL
DENNY L. HOWELL
ENGINEER
053098-E

REV.	DATE	DESCRIPTION
8		
7		
6		
5		
4		
3		
2		
1		

GRADING PERMIT

EROSION AND SEDIMENT CONTROL NOTES & DETAILS

CLIENT: A ROSS MYERS
PROJECT: ALLAN MYERS EQUIPMENT MUSEUM
LOCATION: 1805 BERKS ROAD
WORCESTER TOWNSHIP, MONTGOMERY COUNTY, PA

DATE:	03/10/2025
SCALE:	N.T.S.
DRAWN BY:	NAR
CHECKED BY:	JSR
PROJECT NO.:	4886
CAD FILE:	11 EROSION AND SEDIMENT CONTROL PLAN.dwg
PLOTTED:	03/10/2025
DRAWING NO.:	C06.2
SHEET	12 OF 18

COPYRIGHT 2021 D.L. HOWELL & ASSOCIATES, INC. - ALL RIGHTS RESERVED. THESE PLANS ARE THE PROPERTY OF D.L. HOWELL & ASSOCIATES, INC. ANY USE OR REPRODUCTION OF THESE PLANS IN WHOLE OR PART, WITHOUT THE WRITTEN PERMISSION OF D.L. HOWELL & ASSOCIATES, INC. IS FORBIDDEN.

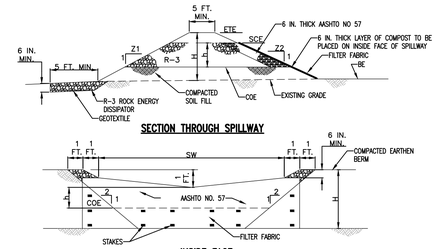

TRAP NO.	Z1 (FT)	Z2 (FT)	H (FT)	h (FT)	EMBANK. TOP ELEV. ETE (FT)	SPILLWAY CREST ELEV. SCE (FT)	CLEAN OUT ELEV. COE (FT)	BOTTOM ELEV. BE (FT)	SPILLWAY WIDTH SW (FT)
2	3	3	3.27	1	422.00	420.50	418.00	416.00	25

NOTES:

EMBANKMENT OUTLET SHALL BE COMPOSED ENTIRELY OF ROCK ABOVE CLEAN OUT ELEVATION (COE); MAIN BODY R-3 OR LARGER -- R-4 TO BE USED FOR DRAINAGE AREAS GREATER THAN 3.0 ACRES, INSIDE FACE ASHTO # 57 STONE OR SMALLER. A 6 IN. THICK LAYER OF COMPOST, COMPOST SOCK, OR CLEAN SAND SHALL BE INSTALLED ON TOP OF THE ASHTO #57 STONE AND SECURELY ANCHORED IN HQ WATERSHEDS. 24 IN. DIAMETER COMPOST SOCK(S) SHALL BE USED IN PLACE OF FILTER FABRIC AND ASHTO #57 STONE IN EV WATERSHEDS.

FILL MATERIAL FOR THE EMBANKMENTS SHALL BE FREE OF ROOTS, OR OTHER WOODY VEGETATION, ORGANIC MATERIAL, LARGE STONES, AND OTHER OBJECTIONABLE MATERIALS. THE EMBANKMENT SHALL BE COMPACTED IN LAYERED LIFTS OF NOT MORE THAN 9 IN.. THE MAXIMUM ROCK SIZE SHALL BE NO GREATER THAN 6 IN.
UPON COMPLETION, THE EMBANKMENT SHALL BE SEEDED AND MULCHED OR OTHERWISE STABILIZED ACCORDING TO THE SPECIFICATIONS OF THE E&S PLAN DRAWINGS.

ALL SEDIMENT TRAPS SHALL BE INSPECTED AT LEAST WEEKLY AND AFTER EACH RUNOFF EVENT.

ACCESS FOR SEDIMENT REMOVAL AND OTHER REQUIRED MAINTENANCE ACTIVITIES SHALL BE PROVIDED.

A CLEAN OUT STAKE SHALL BE PLACED NEAR THE CENTER OF EACH TRAP. ACCUMULATED SEDIMENT SHALL BE REMOVED WHEN IT HAS REACHED THE CLEAN OUT ELEVATION ON THE STAKE AND THE TRAP RESTORED TO ITS ORIGINAL DIMENSIONS. DISPOSE OF MATERIALS REMOVED FROM THE TRAP IN THE MANNER DESCRIBED IN THE E&S PLAN.

CHECK EMBANKMENTS, SPILLWAYS, AND OUTLETS FOR EROSION, PIPING AND SETTLEMENT. CLOGGED OR DAMAGED SPILLWAYS AND/OR EMBANKMENTS SHALL BE IMMEDIATELY RESTORED TO THE DESIGN SPECIFICATIONS.

DISPLACED RIPRAP WITHIN THE SPILLWAY OR OUTLET PROTECTION SHALL BE REPLACED IMMEDIATELY.

ACCUMULATED SEDIMENT SHALL BE REMOVED AND DISTURBED AREAS INSIDE THE TRAP SHALL BE STABILIZED BEFORE CONVERSION TO A STORMWATER MANAGEMENT FACILITY. TO ASSIST IN REMOVING SEDIMENT, WHICH MAY BE SATURATED, A DEVICE SUCH AS IS SHOWN IN STANDARD CONSTRUCTION DETAIL #7-18 MAY BE USED TO DEWATER THE SEDIMENT PRIOR TO ITS REMOVAL.

STANDARD CONSTRUCTION DETAIL #8-1
EMBANKMENT SEDIMENT TRAP
NOT TO SCALE

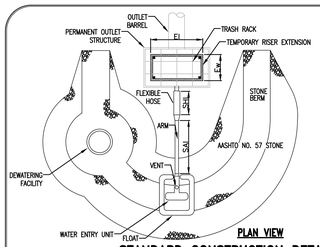

NOTES:

NO GUIDE RAILS SHALL BE REQUIRED FOR THIS INSTALLATION.

THIS DETAIL SHALL BE USED IN CONJUNCTION WITH STANDARD CONSTRUCTION DETAILS #7-2 AND #7-4.

STANDARD CONSTRUCTION DETAIL #7-3
SKIMMER WITH STONE LANDING BERM
NOT TO SCALE

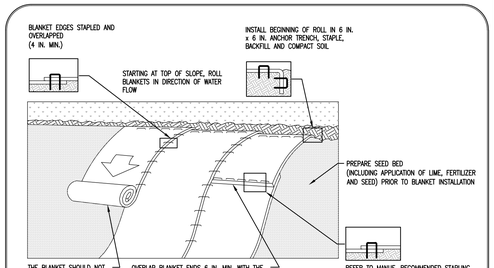

NOTES:

SEED AND SOIL AMENDMENTS SHALL BE APPLIED ACCORDING TO THE RATES IN THE PLAN DRAWINGS PRIOR TO INSTALLING THE BLANKET.

PROVIDE ANCHOR TRENCH AT TOE OF SLOPE IN SIMILAR FASHION AS AT TOP OF SLOPE.

SLOPE SURFACE SHALL BE FREE OF ROCKS, CLODS, STICKS, AND GRASS.

BLANKET SHALL HAVE GOOD CONTINUOUS CONTACT WITH UNDERLYING SOIL THROUGHOUT ENTIRE LENGTH. LAY BLANKET LOOSELY AND STAKE OR STAPLE TO MAINTAIN DIRECT CONTACT WITH SOIL. DO NOT STRETCH BLANKET.

THE BLANKET SHALL BE STAPLED IN ACCORDANCE WITH THE MANUFACTURER'S RECOMMENDATIONS.

BLANKETED AREAS SHALL BE INSPECTED WEEKLY AND AFTER EACH RUNOFF EVENT UNTIL PERENNIAL VEGETATION IS ESTABLISHED TO A MINIMUM UNIFORM 70% COVERAGE THROUGHOUT THE BLANKETED AREA. DAMAGED OR DISPLACED BLANKETS SHALL BE RESTORED OR REPLACED WITHIN 4 CALENDAR DAYS.

STANDARD CONSTRUCTION DETAIL #11-1
EROSION CONTROL BLANKET INSTALLATION
NOT TO SCALE

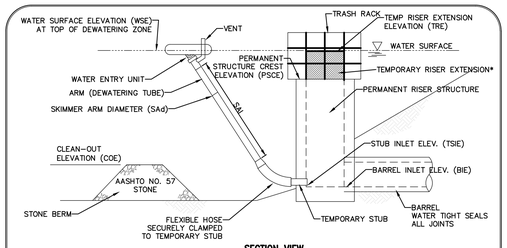

BASIN NO.	WATER SURFACE ELEV. WSE (FT)	SKIMMER						
		ORIFICE		ARM			FLEXIBLE HOSE	
		DIA. (IN)	HEAD (FT)	DIA. SAd (IN)	LENGTH SAL (FT)	MAT'L	DIA. (IN)	LENGTH (IN)	MAT'L
1	332.29	3	2	3	4	PVC	3	12	PVC

TEMPORARY STUB			PERMANENT RISER			RISER EXTENSION				BARREL
INSIDE DIA (IN)	INVERT ELEV TSIE (FT)	MAT'L	CREST ELEV PSCE (FT)	HORIZ OPENING		CREST ELEV TRE (FT)	HORIZ OPENING			INLET ELEV BIE (FT)
				LENGTH EI (IN)	WIDTH Ew (IN)		LENGTH (IN)	WIDTH (IN)		
3	330.81	PVC	332.29	48	24	N/A	N/A	N/A		330.81

NOTES:

ALL ORIFICES ON PERMANENT RISER BELOW TEMPORARY RISER EXTENSION SHALL HAVE WATER-TIGHT TEMPORARY SEALS PROVIDED. TEMPORARY STUB INVERT ELEVATION SHALL BE SET AT OR BELOW SEDIMENT CLEAN-OUT ELEVATION.

A ROPE SHALL BE ATTACHED TO THE SKIMMER ARM TO FACILITATE ACCESS TO THE SKIMMER ONCE INSTALLED.

SKIMMER SHALL BE INSPECTED WEEKLY AND AFTER EACH RUNOFF EVENT.
ANY MALFUNCTIONING SKIMMER SHALL BE REPAIRED OR REPLACED WITHIN 24 HOURS OF INSPECTION.

ICE OR SEDIMENT BUILDUP AROUND THE PRINCIPAL SPILLWAY SHALL BE REMOVED SO AS TO ALLOW THE SKIMMER TO RESPOND TO FLUCTUATING WATER ELEVATIONS.

SEDIMENT SHALL BE REMOVED FROM THE BASIN WHEN IT REACHES THE LEVEL MARKED ON THE SEDIMENT CLEAN-OUT STAKE OR THE TOP OF THE STONE BERM. SEE STANDARD CONSTRUCTION DETAIL #7-3 FOR CONFIGURATION OF STONE BERM.

STANDARD CONSTRUCTION DETAIL #7-2
SKIMMER ATTACHED TO PERMANENT RISER
NOT TO SCALE

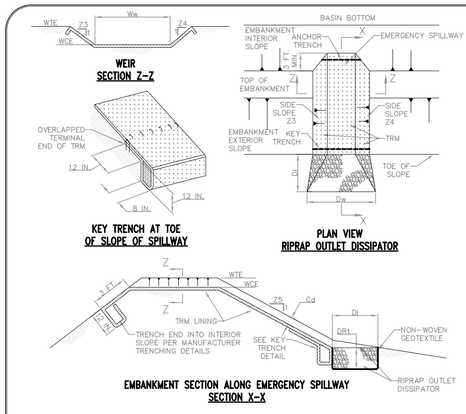

BASIN NO.	WEIR					LINING		CHANNEL		DISSIPATOR			
	Z3 (FT)	Z4 (FT)	TOP ELEV WTE (FT)	CREST ELEV WCE (FT)	WIDTH Ww (FT)	TRM TYPE	STAPLE PATTERN	Z5 (FT)	DEPTH Cd (FT)	LENGTH DI (FT)	WIDTH Dw (FT)	RIPRAP SIZE (R-_)	RIPRAP THICK. DRI (IN)
1	3	3	422.00	420.50	25	NAG P300	B	3	.5	3	25	4	18

NOTES:

HEAVY EQUIPMENT SHALL NOT CROSS OVER SPILLWAY WITHOUT PRECAUTIONS TAKEN TO PROTECT TRM LINING.

DISPLACED LINER WITHIN THE SPILLWAY AND/OR OUTLET CHANNEL SHALL BE REPLACED IMMEDIATELY.

RIPRAP AT TOE OF EMBANKMENT SHALL BE EXTENDED A SUFFICIENT LENGTH IN BOTH DIRECTIONS TO PREVENT SCOUR.

THE USE OF BAFFLES THAT REQUIRE SUPPORT POSTS ARE RESTRICTED FROM USE IN BASINS REQUIRING IMPERVIOUS LINERS.

STANDARD CONSTRUCTION DETAIL #7-13
SEDIMENT TRAP EMERGENCY SPILLWAY WITH TRM LINING
NOT TO SCALE

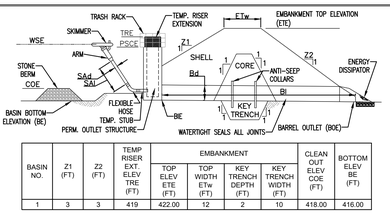

BASIN NO.	Z1 (FT)	Z2 (FT)	TEMP RISER EXT. ELEV TRE (FT)	EMBANKMENT				CLEAN OUT ELEV COE (FT)	BOTTOM ELEV BE (FT)
				TOP ELEV ETE (FT)	TOP WIDTH ETw (FT)	KEY TRENCH DEPTH (FT)	KEY TRENCH WIDTH (FT)		
1	3	3	419	422.00	12	2	10	418.00	416.00

SKIMMER			OUTLET BARREL				
DIA SAd (IN)	LENGTH SAl (FT)	MAT'L	DIA Bd (IN)	INLET ELEV BIE (FT)	MAT'L	LENGTH Bl (FT)	OUTLET ELEV BOE (FT)
3	4	PVC	12	411.83	ADS	79.8	407.83

NOTES:

SEDIMENT TRAPS, INCLUDING ALL APPURTENANT WORKS, SHALL BE CONSTRUCTED TO THE DETAIL AND DIMENSIONS SHOWN ON THE E&S PLAN DRAWINGS.

AREA UNDER EMBANKMENT SHALL BE CLEARED, GRUBBED, AND STRIPPED OF TOPSOIL TO A DEPTH OF TWO FEET PRIOR TO ANY PLACEMENT AND COMPACTION OF EARTHEN FILL. IN ORDER TO FACILITATE MAINTENANCE AND RESTORATION, THE POOL AREA SHALL BE CLEARED OF ALL BRUSH, TREES, AND OBJECTIONABLE MATERIAL. FILL MATERIAL FOR THE EMBANKMENTS SHALL BE FREE OF ROOTS, OR OTHER WOODY VEGETATION, ORGANIC MATERIAL, LARGE STONES, AND OTHER OBJECTIONABLE MATERIALS. THE EMBANKMENT SHALL BE COMPACTED IN LAYERED LIFTS OF NOT MORE THAN 6 TO 9 IN. THE MAXIMUM ROCK SIZE SHALL BE NO GREATER THAN 2/3 THE LIFT THICKNESS.

UPON COMPLETION, THE EMBANKMENT SHALL BE SEEDED, MULCHED, BLANKETED OR OTHERWISE STABILIZED ACCORDING TO THE SPECIFICATIONS OF THE E&S PLAN DRAWINGS. TREES SHALL NOT BE PLANTED ON THE EMBANKMENT.

INSPECT ALL SEDIMENT TRAPS ON AT LEAST A WEEKLY BASIS AND AFTER EACH RUNOFF EVENT. PROVIDE ACCESS FOR SEDIMENT REMOVAL AND OTHER REQUIRED MAINTENANCE ACTIVITIES. A CLEAN OUT STAKE SHALL BE PLACED NEAR THE CENTER OF EACH BASIN. ACCUMULATED SEDIMENT SHALL BE REMOVED WHEN IT HAS REACHED THE CLEAN OUT ELEVATION ON THE STAKE AND THE BASIN RESTORED TO ITS ORIGINAL DIMENSIONS. DISPOSE OF MATERIALS REMOVED FROM THE BASIN IN THE MANNER DESCRIBED IN THE E&S PLAN.

BASIN EMBANKMENTS, SPILLWAYS, AND OUTLETS SHALL BE INSPECTED FOR EROSION, PIPING AND SETTLEMENT. NECESSARY REPAIRS SHALL BE IMMEDIATELY. DISPLACED RIPRAP WITHIN THE OUTLET ENERGY DISSIPATER SHALL BE REPLACED IMMEDIATELY.

ACCUMULATED SEDIMENT SHALL BE REMOVED AND DISTURBED AREAS SHALL BE STABILIZED INSIDE THE BASIN BEFORE CONVERSION TO A STORMWATER MANAGEMENT FACILITY. THE DEVICE SHOWN IN STANDARD CONSTRUCTION DETAIL #7-16 MAY BE USED TO DEWATER SATURATED SEDIMENT PRIOR TO ITS REMOVAL. ROCK FILTERS SHALL BE ADDED AS NECESSARY.

STANDARD CONSTRUCTION DETAIL #7-4
SEDIMENT TRAP EMBANKMENT AND SPILLWAY DETAILS – SKIMMER
NOT TO SCALE

HOWELL ENGINEERING
Local Knowhow. Engineered.
Civil Engineering | Land Planning | Environmental
1250 Wrights Lane, West Chester, PA 19380
Phone: (610) 918-9002 Fax: (610) 918-9003

COMMONWEALTH OF PENNSYLVANIA
REGISTERED PROFESSIONAL
DENNY L. HOWELL
ENGINEER
055306-E

REV.	DATE	DESCRIPTION
8		
7		
6		
5		
4		
3		
2		
1		

GRADING PERMIT
EROSION AND SEDIMENT CONTROL NOTES & DETAILS

CLIENT: A ROSS MYERS
PROJECT: ALLAN MYERS EQUIPMENT MUSEUM
LOCATION: 1805 BERKS ROAD
WORCESTER TOWNSHIP, MONTGOMERY COUNTY, PA

DATE:	03/10/2025
SCALE:	N.T.S.
DRAWN BY:	NAR
CHECKED BY:	JSR
PROJECT NO.:	4886
CAD FILE:	EROSION AND SEDIMENT CONTROL PLAN.dwg
PLOTTED:	03/10/2025
DRAWING NO.:	C06.3
SHEET	13 OF 18

G:\CIVIL 3D JOBS\4886\4886 PRODUCTION PLANS\SHEET SET\SUBDIVISION & LD\11 EROSION AND SEDIMENT CONTROL PLAN.DWG
COPYRIGHT 2021 D.L. HOWELL & ASSOCIATES, INC – ALL RIGHTS RESERVED. THESE PLANS ARE THE PROPERTY OF D.L. HOWELL & ASSOCIATES, INC. ANY USE OR REPRODUCTION OF THESE PLANS IN WHOLE OR PART, WITHOUT THE WRITTEN PERMISSION OF D.L. HOWELL & ASSOCIATES, INC. IS FORBIDDEN.

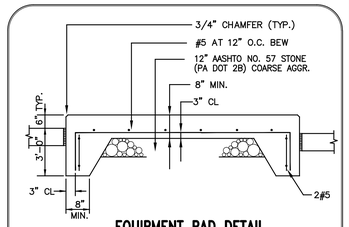

EQUIPMENT PAD DETAIL
NOT TO SCALE

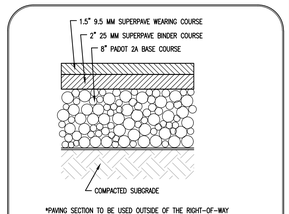

*PAVING SECTION TO BE USED OUTSIDE OF THE RIGHT-OF-WAY

SITE PAVING DETAIL
NOT TO SCALE

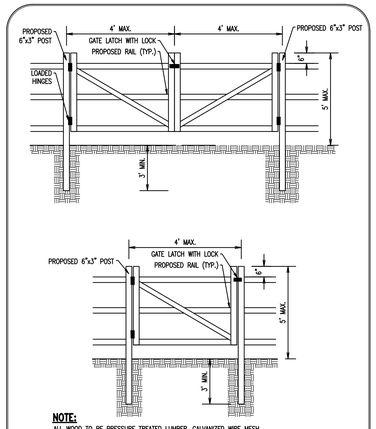

NOTE:
ALL WOOD TO BE PRESSURE TREATED LUMBER. GALVANIZED WIRE MESH FENCE (13 GAGE) WITH VINYL COATING TO BE SECURED TO OUTSIDE OF FENCE

4' & 8' POST & RAIL GATE DETAIL
NOT TO SCALE

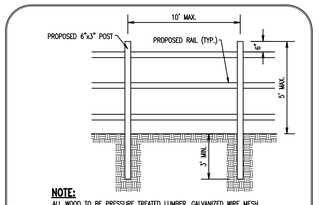

NOTE:
ALL WOOD TO BE PRESSURE TREATED LUMBER. GALVANIZED WIRE MESH FENCE (13 GAGE) WITH VINYL COATING TO BE SECURED TO OUTSIDE OF FENCE

POST & RAIL FENCE DETAIL
NOT TO SCALE

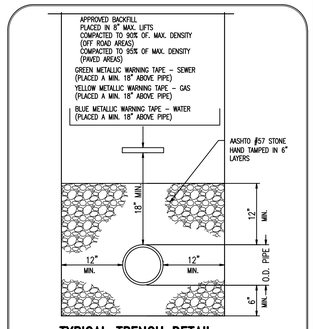

TYPICAL TRENCH DETAIL
NOT TO SCALE

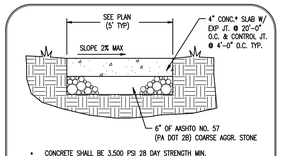

- CONCRETE SHALL BE 3,500 PSI 28 DAY STRENGTH MIN.
- CONSTRUCTION AND MATERIALS FOR THE SIDEWALK ARE TO BE IN ACCORDANCE WITH PENNDOT PUBLICATION 408

SIDEWALK DETAIL
NOT TO SCALE

NOTE:
ALL WOOD TO BE PRESSURE TREATED LUMBER. GALVANIZED WIRE MESH FENCE (13 GAGE) WITH VINYL COATING TO BE SECURED TO OUTSIDE OF FENCE

4' & 8' POST & RAIL GATE DETAIL
NOT TO SCALE

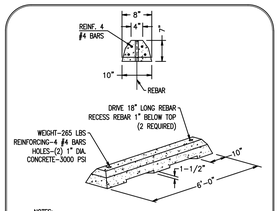

NOTES:
1. ALL MATERIALS & WORK TO CONFORM TO PENNDOT FORM 408 SPECIFICATIONS. LATEST EDITION.

CONCRETE CURB STOP
NOT TO SCALE

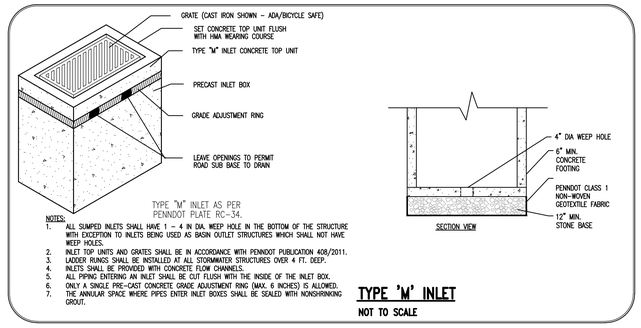

NOTES:
1. ALL SUMPED INLETS SHALL HAVE 1 – 4 IN DIA. WEEP HOLE IN THE BOTTOM OF THE STRUCTURE WITH EXCEPTION TO INLETS BEING USED AS BASIN OUTLET STRUCTURES WHICH SHALL NOT HAVE WEEP HOLES.
2. INLET TOP UNITS AND GRATES SHALL BE IN ACCORDANCE WITH PENNDOT PUBLICATION 408/2011.
3. LADDER RUNGS SHALL BE INSTALLED AT ALL STORMWATER STRUCTURES OVER 4 FT. DEEP.
4. INLETS SHALL BE PROVIDED WITH CONCRETE FLOW CHANNELS.
5. ALL PIPING ENTERING AN INLET SHALL BE CUT FLUSH WITH THE INSIDE OF THE INLET BOX.
6. ONLY A SINGLE PRE-CAST CONCRETE GRADE ADJUSTMENT RING (MAX. 6 INCHES) IS ALLOWED.
7. THE ANNULAR SPACE WHERE PIPES ENTER INLET BOXES SHALL BE SEALED WITH NONSHRINKING GROUT.

TYPE 'M' INLET
NOT TO SCALE

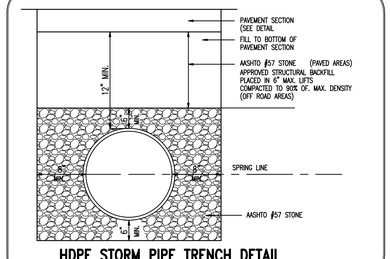

HDPE STORM PIPE TRENCH DETAIL
NOT TO SCALE

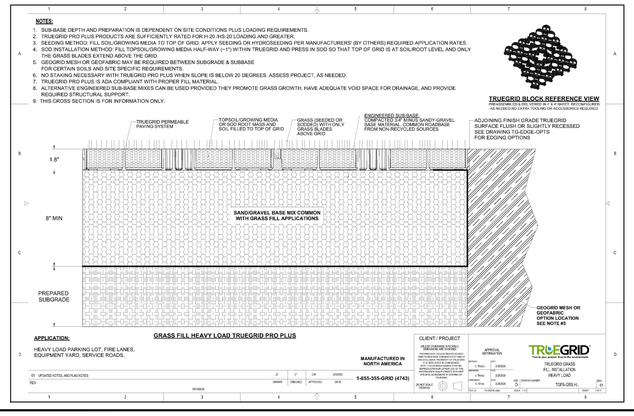

HOWELL ENGINEERING
Local Knowhow. Engineered.
Civil Engineering | Land Planning | Environmental
1250 Wrights Lane, West Chester, PA 19380
Phone: (610) 918-9002 Fax: (610) 918-9003

COMMONWEALTH OF PENNSYLVANIA
REGISTERED PROFESSIONAL
DENNY L. HOWELL
ENGINEER
053008-E

REV.	DATE	DESCRIPTION
1		
2		
3		
4		
5		
6		
7		
8		

GRADING PERMIT
CONSTRUCTION DETAILS

CLIENT: A ROSS MYERS
PROJECT: ALLAN MYERS EQUIPMENT MUSEUM
LOCATION: 1805 BERKS ROAD
WORCESTER TOWNSHIP, MONTGOMERY COUNTY, PA

DATE:	03/10/2025
SCALE:	N.T.S.
DRAWN BY:	NAR
CHECKED BY:	JSR
PROJECT NO.:	4886
CAD FILE:	14- CONSTRUCTION DETAILS.dwg
PLOTTED:	03/10/2025
DRAWING NO.:	C07.1
SHEET	14 of 18

COPYRIGHT 2021 D.L. HOWELL & ASSOCIATES, INC. – ALL RIGHTS RESERVED. THESE PLANS ARE THE PROPERTY OF D.L. HOWELL & ASSOCIATES, INC AND USE OR REPRODUCTION OF THESE PLANS IN WHOLE OR PART WITHOUT THE WRITTEN PERMISSION OF D.L. HOWELL & ASSOCIATES, INC IS FORBIDDEN.

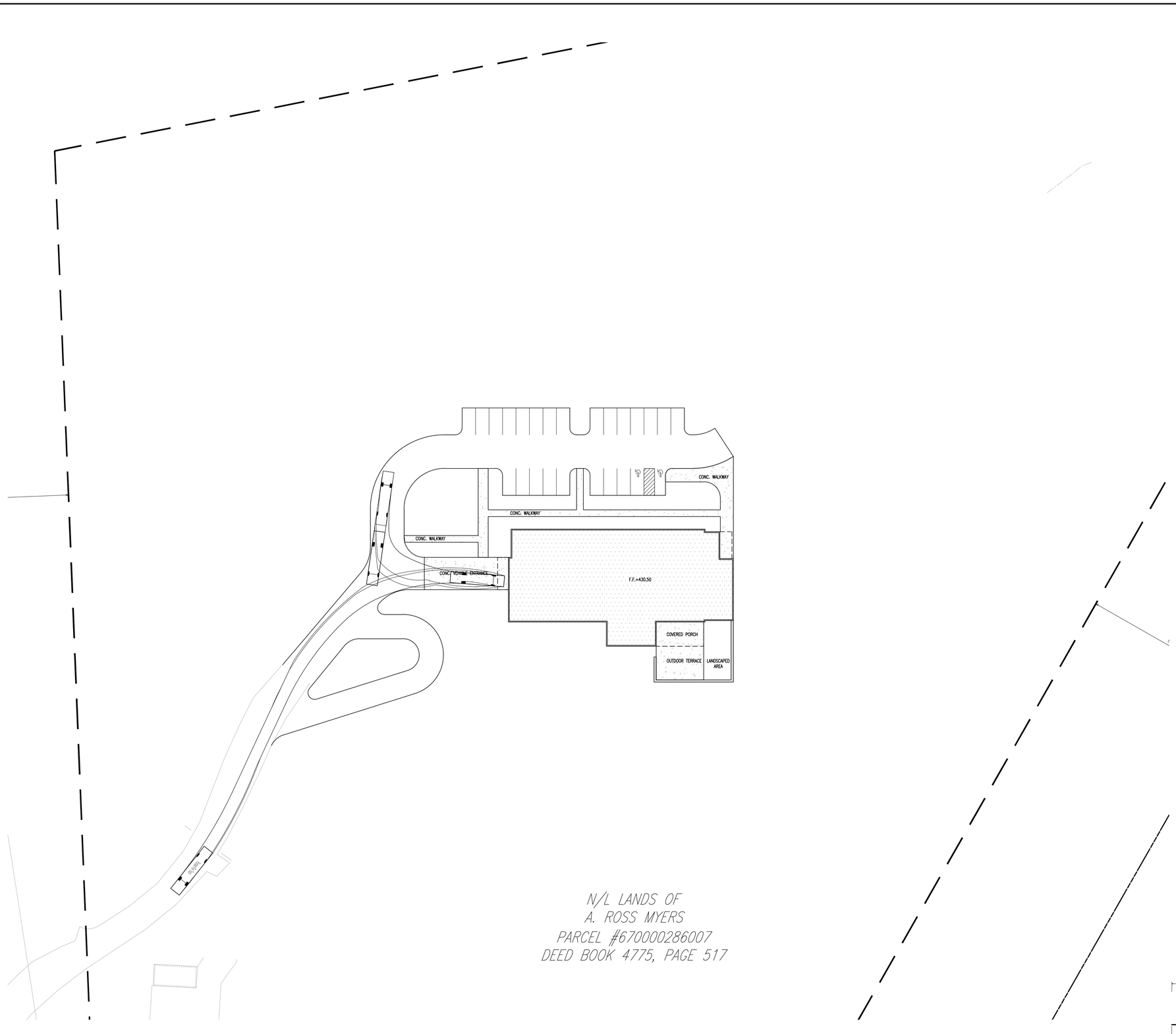

LEGEND

EX. PROPERTY LINE	242	EXISTING CONTOUR	PROP. LIGHT POLE	E	PROP. ELEC. LINE	PROP. STORM INLET	W PROP. WATER LINE
PROP. PROPERTY LINE	242	PROPOSED CONTOUR	EX. FENCE	E	EX. UTILITY POLE	PROP. STORM INLET ID (JC 1)	WL PROP. WATER LATERAL
EX. RIGHT-OF-WAY	x 123.00	EXISTING SPOT ELEV.	EX. MAIL BOX		PROP. UTILITY POLE		FW PROP. FIRE WATER LINE
PROP. RIGHT-OF-WAY	x 123.00	NEW SPOT ELEV.	EX. SIGN		EX. GUY ANCHOR	PROP. SEEPAGE BED	W.V. EX. WATER VALVE
EX. MONUMENT	GEB2	SOILS TYPE	PROP. SIGN	G	EX. GAS LINE		W.V. PROP. WATER VALVE
PROP. MONUMENT		SOILS LINE	PROP. PARKING SPACE	G	PROP. GAS LINE	S EX. SANITARY SEWER LINE	F.H. EX. HYDRANT
EX. REBAR		EX. CONC. CURB	PROP. PARKING SPACES	G.V.	EX. GAS VALVE	S PROP. SAN. SEWER LINE	F.H. PROP. HYDRANT
PROP. REBAR		PROP. CONC. CURB	(TBR) TO BE REMOVED	G.V.	PROP. GAS VALVE	L PROP. SAN. SEWER LATERAL	EX. MANHOLE
EX. EASEMENT		EX. EDGE OF PAVING	EX. TELE. LINE		EX. STORM SEWER LINE	MH 1 PROP. SANITARY MH. ID	PROP. MANHOLE
PROP. EASEMENT		PROP. EDGE OF PAVING	T PROP. TELE. LINE		PROP. STORM SEWER LINE		EX. PERC TEST
EX. WETLANDS		EX. LIGHT POLE	E EX. ELEC. LINE		EX. STORM INLET	W EX. WATER LINE	EX. TEST PIT

TRUCK TURNING PLAN

SCALE: 1"=30'

30 0 15 30 60

GRAPHIC SCALE
1 inch = 30 feet

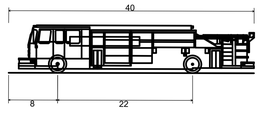

Pumper Fire Truck	
Overall Length	40.000ft
Overall Width	8.167ft
Overall Body Height	7.745ft
Min Body Ground Clearance	0.656ft
Track Width	8.167ft
Lock-to-lock time	5.00s
Max Wheel Angle	45.00°

HOWELL ENGINEERING
Local Knowhow. Engineered.
Civil Engineering | Land Planning | Environmental
1250 Wrights Lane, West Chester, PA 19380
Phone: (610) 918-9002 Fax: (610) 918-9003

COMMONWEALTH OF PENNSYLVANIA
REGISTERED PROFESSIONAL
DENNY L. HOWELL
ENGINEER
PENNSYLVANIA

REV.	DATE	DESCRIPTION
1		
2		
3		
4		
5		
6		
7		
8		

GRADING PERMIT
TRUCK TURNING PLAN

CLIENT: A ROSS MYERS
PROJECT: ALLAN MYERS EQUIPMENT MUSEUM
LOCATION: 1805 BERKS ROAD
WORCESTER TOWNSHIP, MONTGOMERY COUNTY, PA

DATE:	03/10/2025
SCALE:	1"=30'
DRAWN BY:	NAR
CHECKED BY:	JSR
PROJECT NO.:	4886
CAD FILE:	15-TRUCK TURNING PLAN.dwg
PLOTTED:	03/10/2025
DRAWING NO.:	C07.2
SHEET	15 OF 18

Q:\CIVIL 3D JOBS\4886\4886 PRODUCTION PLANS\SHEET SET\SUBDIVISION & LD\15 TRUCK TURNING PLAN.DWG

COPYRIGHT 2021 D.L. HOWELL & ASSOCIATES, INC. – ALL RIGHTS RESERVED. THESE PLANS ARE THE PROPERTY OF D.L. HOWELL & ASSOCIATES, INC. ANY USE OR REPRODUCTION OF THESE PLANS IN WHOLE OR PART, WITHOUT THE WRITTEN PERMISSION OF D.L. HOWELL & ASSOCIATES, INC. IS FORBIDDEN.

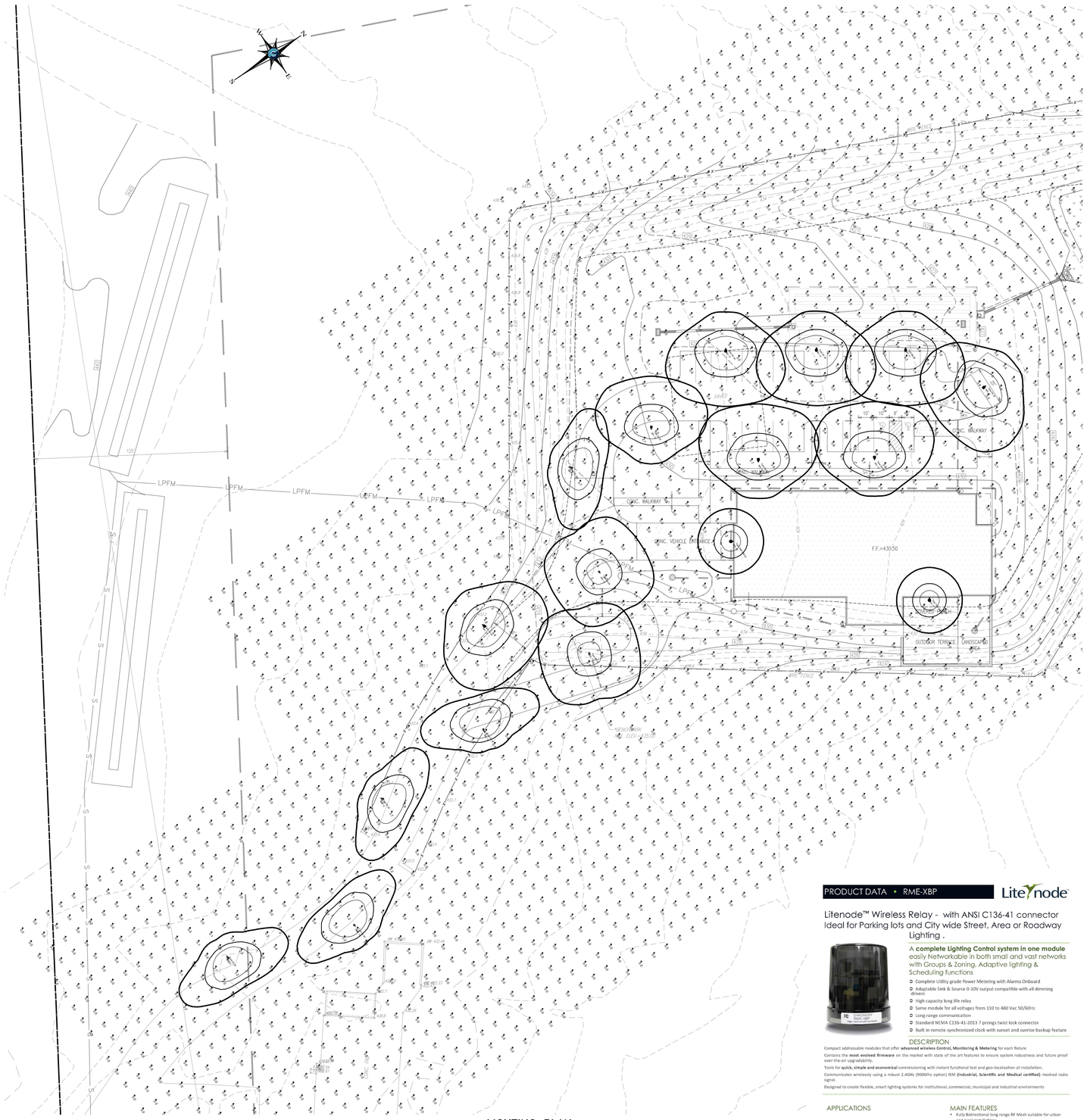

LIGHTING PLAN

SCALE: 1"=30'

30 0 15 30 60

GRAPHIC SCALE
1 inch = 30 feet

LEGEND

EX. PROPERTY LINE	242	EXISTING CONTOUR		PROP. LIGHT POLE	E	PROP. ELEC. LINE	PROP. STORM INLET	PROP. WATER LINE
PROP. PROPERTY LINE	242	PROPOSED CONTOUR		EX. FENCE	E	EX. UTILITY POLE	PROP. STORM INLET ID	WL	PROP. WATER LATERAL
EX. RIGHT-OF-WAY	X 123.00	EXISTING SPOT ELEV.	MB	EX. MAIL BOX		PROP. UTILITY POLE		FW	PROP. FIRE WATER LINE
PROP. RIGHT-OF-WAY	x 123.00	NEW SPOT ELEV.		EX. SIGN		EX. GUY ANCHOR	PROP. SEEPAGE BED		EX. WATER VALVE
EX. MONUMENT	GEB2	SOILS TYPE		PROP. SIGN		EX. GAS LINE		W.V.xxx	PROP. WATER VALVE
PROP. MONUMENT		SOILS LINE		EXISTING PARKING SPACES	G	PROP. GAS LINE	EX. SANITARY SEWER LINE		EX. HYDRANT
EX. REBAR		EX. CONC. CURB		PROP. PARKING SPACES	G.V.	EX. GAS VALVE	PROP. SAN. SEWER LINE	F.H.	PROP. HYDRANT
PROP. REBAR		PROP. CONC. CURB	(TBR)	TO BE REMOVED	G.V.xxx	PROP. GAS VALVE	PROP. SAN. SEWER LATERAL		EX. MANHOLE
EX. EASEMENT		EX. EDGE OF PAVING		EX. TELE. LINE		EX. STORM SEWER LINE	PROP. SANITARY MH. ID		PROP. MANHOLE
PROP. EASEMENT		PROP. EDGE OF PAVING	T	PROP. TELE. LINE		PROP. STORM SEWER LINE			EX. PERC. TEST
EX. WETLANDS		EX. LIGHT POLE		EX. ELEC. LINE		EX. STORM INLET	EX. WATER LINE		EX. TEST PIT

Luminaire Schedule										
Symbol	Qty	Label	[MANUFAC]	Description	Arrangement	LLD	LDD	LLF	BUG Rating
	5	Type S2 29	Leotek Electronics USA LLC	AR13-48N-MV-WW-2-BK-040-PCR7-CR/RWL-S/RME-XBP	SINGLE	0.900	0.800	0.720	B1-U0-G1
	1	Type S4 29	Leotek Electronics USA LLC	AR13-48N-MV-WW-4-BK-040-PCR7-CR/RWL-S/RME-XBP	SINGLE	0.900	0.800	0.720	B1-U0-G1
	7	Type S4 39	Leotek Electronics USA LLC	AR13-48N-MV-WW-4-BK-055-PCR7-CR/RWL-S/RME-XBP	SINGLE	0.900	0.800	0.720	B2-U0-G1
	2	Type S5 29	Leotek Electronics USA LLC	AR13-48N-MV-WW-5-BK-040-PCR7-CR/RWL-S/RME-XBP	SINGLE	0.900	0.800	0.720	B2-U0-G1
	2	Type TM5 WM 20	TMS LIGHTING INC	4W-19LED-35K-WM-BLACK FINISH	SINGLE	0.900	0.800	0.720	B1-U1-G0

Calculation Summary								
Label	CalcType	Units	Avg	Max	Min	Avg/Min	LVRatio	Grid Z
Access Drive	Illuminance	Fc	0.86	4.8	0.1	8.60	N.A.	0
Paved Parking Areas	Illuminance	Fc	0.95	5.3	0.3	3.17	N.A.	0

THIS LIGHTING PLAN DEPICTS PROPOSED SUSTAINED ILLUMINATION LEVELS CALCULATED USING DATA PROVIDED BY THE NOTED MANUFACTURERS.

ANY SUBSTITUTION REQUESTS MUST BE SUBMITTED 15 DAYS PRIOR TO THE BID AND MUST BE ACCOMPANIED BY A HORIZONTAL PHOTOMETRIC STUDY DEMONSTRATING THAT THE FIXTURES IN QUESTION WILL MEET OR EXCEED THE DESIGN INTENT OF THIS PLAN.

ALL EXTERIOR LIGHTING PLANS SHALL BE SUBMITTED 15 DAYS PRIOR TO THE BID TO THE LOCAL LIGHTING AUTHORITY TO DETERMINE IF ALL OF THE LOCAL LIGHTING REQUIREMENTS HAVE BEEN MET AND APPROVED BY THE LOCAL AUTHORITY.

INSTALLATION NOTES:

1.) THE CONTRACTOR SHALL BE RESPONSIBLE FOR THE FIELD VERIFICATION OF ALL EXISTING UNDERGROUND STRUCTURES AND UTILITIES, SUCH AS WATER MAINS, SANITARY AND STORM SEWERS, TELEPHONE AND ELECTRIC CONDUITS, AND GAS LINES, ETC. AND ABOVE GROUND UTILITIES WHICH MAY BE ENCOUNTERED DURING CONSTRUCTION OPERATIONS.
2.) DIMENSIONS ARE APPROXIMATE. THE CONTRACTOR SHALL BE RESPONSIBLE TO VERIFY ALL ELEVATIONS, INVERTS, AND DIMENSIONS IN THE FIELD PRIOR TO THE COMMENCEMENT OF WORK.
3.) THE PENNSYLVANIA ONE CALL NUMBER IS 1-800-242-1776. THE CONTRACTOR IS REQUIRED TO SUBMIT VERIFICATION TO THE MUNICIPALITY THAT A "ONE-CALL" HAS BEEN PLACED PRIOR TO THE START OF DEMOLITION WORK.
4.) THE CONTRACTOR SHALL BE RESPONSIBLE FOR OBTAINING ALL PERMITS FROM THE MUNICIPALITY RELATIVE TO THE PROPOSED PROJECT.
5.) THE CONTRACTOR SHALL REPAIR ALL UTILITY TRENCHING WORK LOCATED WITHIN EXISTING PAVED STREETS.
6.) THE CONTRACTOR SHALL COMPLY WITH ALL CITY, STATE, AND FEDERAL REGULATIONS IN EFFECT AT THE TIME OF CONSTRUCTION.
7.) THE CONTRACTOR SHALL BE RESPONSIBLE FOR ALL TRAFFIC CONTROL.
8.) THE CONTRACTOR SHALL REMOVE ALL TEMPORARY FENCING, GATES, COVERED PEDESTRIAN WALKWAYS, TRAFFIC BARRIERS, AND SIGNAGE AT THE COMPLETION OF THE PROJECT. ALL AREAS DISTURBED AS A RESULT OF THE INSTALLATION OF THESE TEMPORARY CONTROLS SHALL BE RESTORED TO THEIR ORIGINAL CONDITION.
9.) THE LIGHT LEVELS DEPICTED ON THIS PLAN WERE CALCULATED BASED ON THE LLF SHOWN IN THE LUMINAIRE SCHEDULE.
10.) THE LIGHTING VALUES AND CALCULATION POINTS DEPICTED ON THIS PLAN ARE ANALYZED ON A HORIZONTAL GEOMETRIC PLANE AT GROUND LEVEL UNLESS OTHERWISE NOTED.
11.) ILLUMINATION LEVELS ARE SHOWN IN FOOT-CANDLES (FC).
12.) THE ELECTRICAL CONTRACTOR IS RESPONSIBLE TO ENSURE THAT SHIELDING AND OR ROTATED OPTICS ARE INSTALLED AS INDICATED ON THE PLAN IN ORDER TO ACHIEVE THE LIGHTING LEVELS THE REVIEWING AGENCY APPROVED.

CALCULATION NOTES:

THE LIGHT LOSS FACTOR SHALL BE 0.72.

ILLUMINATION VALUES SHOWN (IN FOOTCANDLES) ARE THE PREDICTED RESULTS FOR PLANES OF THE CALCULATION EITHER HORIZONTAL, VERTICAL, OR INCLINED AS DESIGNATED IN THE CALCULATION SUMMARY.

POLE NOTES:
POLES SHALL BE SUPPLIED BY ENERGY LIGHT, INC.

LIGHTING CONTROLS AND SURGE PROTECTION: ALL SITE FIXTURES ARE TO BE EQUIPPED WITH DIMONOFF RME-XBP PHOTOCELLS AND ABLE POWER PRODUCTS RWL-S SURGE DEVICE. FIXTURES MUST BE EQUIPPED WITH ALL-MODE PROTECTION (L-N, L-G, N-G). SURGE PROTECTION INTEGRAL TO THE PHOTOCONTROL SHOULD HAVE 3 MODES OF PROTECTION, LINE-TO-NEUTRAL, LINE-TO-GROUND AND NEUTRAL-TO-GROUND. THE MINIMUM SURGE PROTECTION SPECIFICATIONS SHOULD BE 10KA IN, 25KA IMAX AND 20KV UOC.

GEN3 GATEWAY TO CONTROL ALL OTHER SITE LIGHTING FIXTURES.

FOR PRICING AND COMMISSIONING, PLEASE CONTACT INDEPENDENCE LIGHTING:

INDEPENDENCE LIGHTING
KENT LAZOR
PHONE: 610-363-5271
EMAIL: KLAZOR@COMCAST.NET

LEOTEK

Project
Type
Catalog No.

ARIETA® 13 Architectural LED Area Luminaire
AR13 N-Series Specification Data Sheet

Luminaire Data

Weight 15.4 lbs (7 kg)
EPA 0.47 ft²

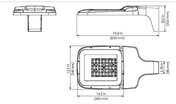
7.8 in
(198.0 mm)
10.0 in
(254.0 mm)
3.0 in
(76.2 mm)
2.0 in
(50.8 mm)
2.0 in
(50.8 mm)
2.0 in
(50.8

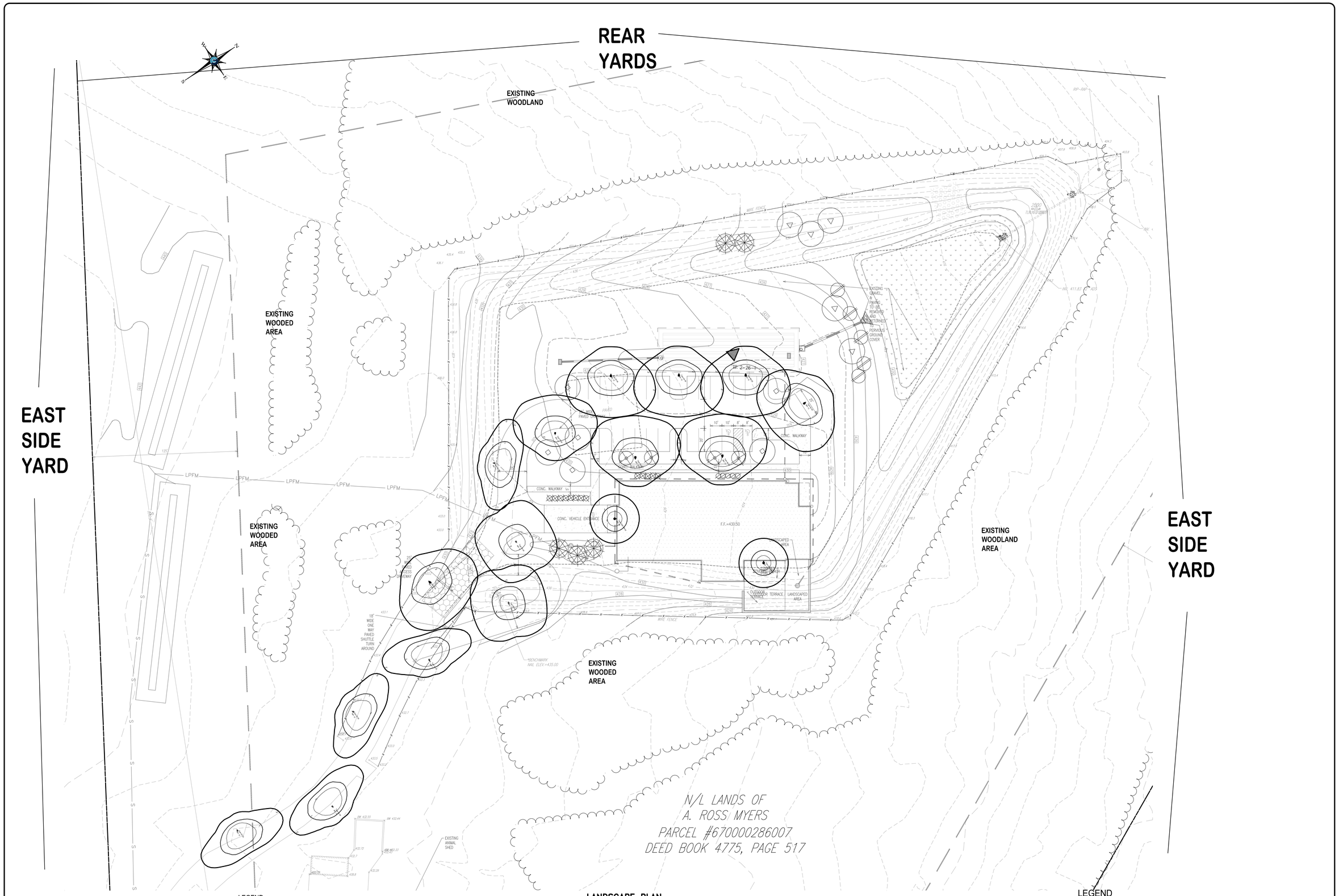

LEGEND

- EX. PROPERTY LINE
- PROP. PROPERTY LINE
- EX. RIGHT-OF-WAY
- PROP. RIGHT-OF-WAY
- EX. EASEMENT
- PROP. MONUMENT
- EX. REBAR
- PROP. REBAR
- EX. EASEMENT
- PROP. EASEMENT
- EX. WETLANDS
- 242 EXISTING CONTOUR
- 242 PROPOSED CONTOUR
- X 123.00 EXISTING SPOT ELEV.
- X 123.00 NEW SPOT ELEV.
- GEB2 SOILS TYPE
- SOILS LINE
- EX. CONC. CURB
- PROP. CONC. CURB
- EX. EDGE OF PAVING
- PROP. EDGE OF PAVING
- EX. LIGHT POLE
- PROP. LIGHT POLE
- EX. FENCE
- EX. MAIL BOX
- EX. SIGN
- PROP. SIGN
- EX. PARKING SPACES
- PROP. PARKING SPACES
- (TBR) TO BE REMOVED
- EX. TELE. LINE
- PROP. TELE. LINE
- EX. ELEC. LINE
- PROP. ELEC. LINE
- EX. UTILITY POLE
- PROP. UTILITY POLE
- EX. GUY ANCHOR
- EX. GAS LINE
- PROP. GAS LINE
- G.V. EX. GAS VALVE
- G.V. PROP. GAS VALVE
- EX. STORM SEWER LINE
- PROP. STORM SEWER LINE
- EX. STORM INLET
- PROP. STORM INLET
- PROP. STORM INLET ID
- PROP. SEEPAGE BED
- EX. SANITARY SEWER LINE
- S PROP. SAN. SEWER LINE
- L PROP. SAN. SEWER LATERAL
- MH 1 PROP. SANITARY MH. ID
- W EX. WATER LINE
- W PROP. WATER LINE
- WL PROP. WATER LATERAL
- FW PROP. FIRE WATER LINE
- W.V. EX. WATER VALVE
- W.V. PROP. WATER VALVE
- F.H. EX. HYDRANT
- F.H. PROP. HYDRANT
- EX. MANHOLE
- PROP. MANHOLE
- EX. PERC TEST
- EX. TEST PIT

LANDSCAPE PLAN

SCALE: 1"=30'

30 0 15 30 60

GRAPHIC SCALE
1 inch = 30 feet

LEGEND

- RED MAPLE (AR)
- LONDON PLANE TREE (PA)
- RED CEDAR (JV)
- SERVICE BERRY (AM)
- DOGWOOD (CF)
- RED TWIG DOGWOOD (CS)
- INKBERRY HOLLY (IG)

HOWELL ENGINEERING
Local Knowhow. Engineered.
Civil Engineering | Land Planning | Environmental
1250 Wrights Lane, West Chester, PA 19380
Phone: (610) 918-9002 Fax: (610) 918-9003

REV.	DATE	DESCRIPTION
1		
2		
3		
4		
5		
6		
7		
8		

GRADING PERMIT
LANDSCAPE PLAN

CLIENT: A ROSS MYERS
PROJECT: ALLAN MYERS EQUIPMENT MUSEUM
LOCATION: 1805 BERKS ROAD
WORCESTER TOWNSHIP, MONTGOMERY COUNTY, PA

DATE:	03/10/2025
SCALE:	1"=30'
DRAWN BY:	NAR
CHECKED BY:	JSR
PROJECT NO.:	4886
CAD FILE:	10 LANDSCAPE NOTES AND DETAILS.dwg
PLOTTED:	03/10/2025
DRAWING NO.:	C9.1
SHEET	17 of 18

Q:\2018_3D JOBS\4886\4886 PRODUCTION PLANS\SHEET SET\LDEVDIVISION & LD\18 LANDSCAPE NOTES AND DETAILS.DWG
COPYRIGHT 2021 D.L. HOWELL & ASSOCIATES, INC. – ALL RIGHTS RESERVED. THESE PLANS ARE THE PROPERTY OF D.L. HOWELL & ASSOCIATES, INC. ANY USE OR REPRODUCTION OF THESE PLANS IN WHOLE OR PART, WITHOUT THE WRITTEN PERMISSION OF D.L. HOWELL & ASSOCIATES, INC. IS FORBIDDEN.

130-28 Landscaping.

E. Landscape plan submission requirements.	REQUIRED	PROPOSED
(5) Perimeter buffers.		
(a) Consistent with the intent of this section, the entire perimeter of a property being developed shall have a buffer which includes trees, shrubs and other landscape improvements necessary to screen or soften the visual impact the development will have on the property, on adjoining properties and on the Township.		
(b) Softening buffer. Along the side and rear property lines of all developments, where existing vegetation is not sufficient and to meet the requirements of a softening buffer,		
[1] The softening buffer plant materials shall include a mix of evergreen and deciduous trees and shrubs in a naturalistic arrangement. The buffer shall consist of a minimum of one evergreen tree for each 35 linear feet; one ornamental or shade tree for each 50 linear feet; and one shrub for each 10 linear feet of property line. .		
REAR YARD A = 1248 LF.		
1248 / 35= 35.6 OR 36 EVERGREEN	36 EVERGREEN	
1248 / 50= 24.9 OR 25 SHADE OR FLOWERING	25 SHADE OR FLOWERING	
1248 / 10= 124.8 OR 125 SHRUBS	125 SHRUBS	
REAR YARD B = 225 LF.		
225 / 35= 6.7 OR 8 EVERGREEN	8 EVERGREEN	
225 / 50= 4.5 OR 5 SHADE OR FLOWERING	5 SHADE OR FLOWERING	
225 / 10= 22.5 OR 235 SHRUBS	235 SHRUBS	WAIVER REQUESTED
		SEE SEC. 27-1903 1.A. LANDSCAPING AND BUFFERING FOR JUSTIFICATION
EAST SIDE YARD = 2378 LF.		
2378 / 35= 67.9 OR 68 EVERGREEN	68 EVERGREEN	
2378 / 50= 47.5 OR 48 SHADE OR FLOWERING	48 SHADE OR FLOWERING	
2378 / 10= 237.8 OR 238 SHRUBS	238 SHRUBS	EXISTING WOODED AREA AND EXISTING BERM TO SATISFY REQUIREMENT.
EAST SIDE YARD = 2378 LF.		
2378 / 35= 67.9 OR 68 EVERGREEN	68 EVERGREEN	
2378 / 50= 47.5 OR 48 SHADE OR FLOWERING	48 SHADE OR FLOWERING	
2378 / 10= 237.8 OR 238 SHRUBS	238 SHRUBS	
(6) Off-street parking areas.		
(a) The perimeters of off-street parking lots in all districts shall be buffered in accordance with the above regulations by means of screening buffers. Internal spaces between buildings and parking areas shall have a minimum width of 15 feet and be buffered with softening buffers. This shall include a softening buffer between buildings and parking as well as between parking areas and public streets.		
PARKING LOT PERIMETER= 160 LF		6 SHADE
BUILDING FACADE= 95 LF.		
95 / 35= 2.7 OR 3 EVERGREEN	3 EVERGREEN	3 EVERGREEN
95 / 50= 1.9 OR 2 SHADE OR FLOWERING	2 SHADE OR FLOWERING	2 SHADE OR FLOWERING
95 / 10= 9.5 OR 1O SHRUBS	1O SHRUBS	1O SHRUBS
(7) Drainage area and detention basin landscaping. Whenever a detention or retention basin is provided, such basin shall conform to the requirements set forth in § 130-24, Chapter 150, Zoning, and the following landscaping requirements:		
(e) Basin floors.		
[1] Floors dry most of the year shall be landscaped in one or combination of the following:		
[a] Seeded or sodded lawn.		
[b] Seeded in low-maintenance wildflowers and meadow grasses.		
(f) Basin perimeter plantings. There shall be a minimum of one shade tree for each 50 linear feet of basin perimeter. To promote diversity, up to 50% of the shade trees may be substituted with an option of two flowering trees, one evergreen tree or 10 shrubs for every shade tree.		
BASIN LF. 445		
445 / 50= 8.9 OR 9 SHADE	9 SHADE	5 SHADE 6 FLOWERING 2 EVERGREEN

GENERAL SPECIFICATIONS

A. NOTES & PLANTING INSTRUCTIONS

1. THE EXECUTION OF THIS PLAN INCLUDES THE FURNISHING OF PLANT MATERIALS AS SPECIFIED, ACCURATE LAYOUT, SUFFICIENT TOPSOIL NUTRIENT ADDITIVES, PEAT MOSS, PLANTING, PRUNING, STAKING, WATERING, LABOR, CLEAN-UP AND ALL OTHER NECESSARY SERVICES TO EXECUTE THE PLANTINGS PROPERLY AND IN FULL ACCORDANCE WITH THESE SPECIFICATIONS AND DETAILS.
2. ALL PLANT MATERIALS ARE TO BE NURSERY GROWN, OF EXCELLENT LANDSCAPE QUALITY AND FREE FROM INSECTS AND DISEASES. FURTHERMORE, PLANTS SHALL HAVE BEEN GROWN FOR AT LEAST TWO YEARS IN THE SAME HARDINESS ZONE AS THE SITE.
3. INSTALLATION TO BE IN ACCORDANCE WITH AMERICAN ASSOCIATION OF NURSERYMAN STANDARDS.
4. PLANT SIZES SHALL BE A FAIR AVERAGE BETWEEN THE SIZE RANGE INDICATED. CALIPER SHALL BE MEASURED AT 4.5' ABOVE GROUND.
5. TREES IN PAVED AREAS SHALL BE UNIFORM IN SHAPE, SIZE, AND CHARACTER. LOWEST BRANCHES SHALL BE AT LEAST 7' FROM GROUND.
6. IF TREES CANNOT BE LOCATED WHERE SHOWN DUE TO UTILITIES OR OTHER OBSTRUCTIONS, EXISTING OR PROPOSED, TREES SHALL BE RELOCATED IN THE FIELD AS APPROVED BY THE OWNER'S REPRESENTATIVE.
7. NO SUBSTITUTIONS ARE ACCEPTABLE UNLESS APPROVED BY THE OWNER'S REPRESENTATIVE AND THE MUNICIPALITY.
8. LANDSCAPE CONTRACTOR TO GUARANTEE ALL PLANT MATERIAL FOR A PERIOD OF 18 MONTHS FROM THE DAY OF FINAL INSPECTION OF THE LANDSCAPE INSTALLATION BY THE MUNICIPALITY.
9. BACKFILL MIXTURE SHALL BE A MIXTURE BY VOLUME OF 3/4 TOPSOIL (TO BE PROVIDED ON SITE) AND 1/4 PEAT MOSS.
10. ALL SHRUBS AND GROUND COVER SHALL BE PLACED IN CONTINUOUS BEDS AS DELINEATED ON THE PLANS.
11. MULCH TO BE SHREDDED OAK BARK OR APPROVED EQUAL AND SPREAD TO A MINIMUM DEPTH OF 2 INCHES.
12. A PRE-EMERGENT HERBICIDE SUCH AS "TREPLAN" SHALL BE APPLIED TO ALL PLANTING BEDS ACCORDING TO MANUFACTURER'S RECOMMENDATION (PRIOR TO PLACEMENT OF MULCH). A SECOND APPLICATION OF PRE-EMERGENT HERBICIDE SHALL BE INCLUDED AS A PART OF THIS WORK.
13. THE CONTRACTOR SHALL NOTIFY THE OWNER'S REPRESENTATIVE TO SELECT ALL PLANT MATERIAL AT THE NURSERY AND APPROVE STAKING OF ALL PLANT MATERIAL LOCATIONS AT THE SITE BEFORE DELIVERY.
14. LANDSCAPE CONTRACTOR IS RESPONSIBLE FOR WATERING IN SUFFICIENTLY AT TIME OF PLANTING .

SEEDING SPECIFICATIONS:

1. ALL AREAS DISTURBED BY CONSTRUCTION SHALL BE SEEDED.
2. SEEDING SHALL COMMENCE BETWEEN AUGUST 15 AND SEPTEMBER 30, OR BETWEEN MARCH 15 AND APRIL 30, AS WEATHER PERMITS AND/OR AS APPROVED BY THE OWNER'S REPRESENTATIVE.
3. TOPSOIL USED FOR SEEDING IS STOCKPILED ON SITE. TOPSOIL SHALL BE SPREAD TO A DEPTH OF 6" AND FIND GRADED, REMOVING ALL DEBRIS AND STONES LARGER THAN 1". REMOVE FROM THE SITE ALL DEBRIS AND STONES.
4. INCORPORATE BY DISCING INTO THE TOP 2" OF THE TOPSOIL THE FOLLOWING:
   A) AGRICULTURAL LIMESTONE AT 50 LBS./1000 S.F.
   B) FERTILIZER (5-10-5) AT 30 LBS./1000 S.F.
5. SEEDING MIX: APPLY GRASS SEED COMPOSED OF THE FOLLOWING VARIETIES WHICH SHALL BE MIXED IN THE PROPORTIONS AND SHALL TEST THE MINIMUM PERCENTAGES OF PURITY AND GERMINATION SPECIFIED.

MIXTURE A: (SEED RATE @ 4-1/2 LBS./1,000 S.F. OR 200 LB./ACRE

PROP. BY WT.	MIN. % MIN. % MAX % COMMON NAME	GERMINATION	PURE SEED	WEED SEED
20%	HYBRID KY BLUEGRASS	80	95	0.02
20%	HYBRID TURF TYPE TALL FESCUE	80	95	0.02
40%	HYBRID PERENNIAL RYE	80	95	0.02

6. FIRM SEED BED WITH ROLLER AND MULCH WITH SALT HAY AND ASPHALTIC TACK COAT OR HYDRO MULCH AT THE RATE OF 1,500 LBS. PER ACRE.
7. ALL LAWN WORK INCLUDING THE REPAIR OF WASHOUTS, GULLIES, ETC., SHALL BE GUARANTEED FOR ONE CALENDAR YEAR FROM THE DATE OF COMPLETION OF INSTALLATION.
8. SOD (IF REQUIRED) SHALL BE SAME AS SEED MIX AND INSTALLED IN ACCORDANCE WITH AMERICAN ASSOCIATION OF SOD PRODUCERS' STANDARDS.

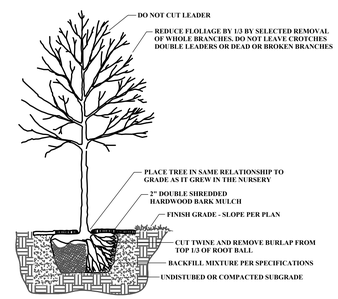

TYPICAL DECIDUOUS TREE PLANTING DETAIL
(NOT TO SCALE)

TYPICAL SHRUB PLANTING DETAIL
(NOT TO SCALE)

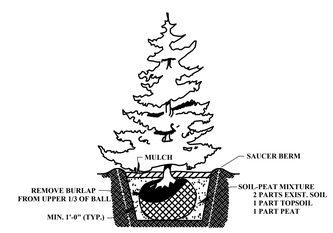

TYPICAL EVERGEEN TREE PLANTING DETAIL
(NOT TO SCALE)

PLANT LIST

KEY	BOTANICAL NAME	COMMON NAME	QTY.	CAL.	ROOT	REMARKS
SHADE TREE						
AR	Acer rubrum'October Glory'	OCTOBER GLORY RED MAPLE	5	2 1/2 " MIN.	B&B	Matched Specimens
PA	Platanus x acerfolia	LONDON PLANE TREE	7	2 1/2 " MIN.	B&B	Matched Specimens
EVERGREEN TREE						
JV	Juniperus virginia	EASTERN RED CEDAR	5	6' HT. MIN.	B&B	Full branched
FLOWERING TREES						
AC	Amelanchier canadensis	SERVICEBERRY	5	8' HT. MIN.	B&B	Matched Specimens
SHRUBS						
IG	Ilex glabra	INKBERRY HOLLY	13	36" HT.	CONT.	
CS	Cornus sericea	RED OSIER DOGWOOD	5	36" HT.	CONT.	

HOWELL ENGINEERING
Local Knowhow. Engineered.
Civil Engineering | Land Planning | Environmental
1250 Wrights Lane, West Chester, PA 19380
Phone: (610) 918-9002 Fax: (610) 918-9003

REV.	DATE	DESCRIPTION
1		
2		
3		
4		
5		
6		
7		
8		

GRADING PERMIT

LANDSCAPE NOTES AND DETAILS

CLIENT: A ROSS MYERS
PROJECT: ALLAN MYERS EQUIPMENT MUSEUM
LOCATION: 1805 BERKS ROAD
WORCESTER TOWNSHIP, MONTGOMERY COUNTY, PA

DATE:	03/10/2025
SCALE:	N.T.S.
DRAWN BY:	NAR
CHECKED BY:	JSR
PROJECT NO.:	4886
CAD FILE:	18 LANDSCAPE NOTES AND DETAILS.dwg
PLOTTED:	03/10/2025
DRAWING NO.:	C09.2
SHEET	18 of 18

COPYRIGHT 2021 D.L. HOWELL & ASSOCIATES, INC. – ALL RIGHTS RESERVED. THESE PLANS ARE THE PROPERTY OF D.L. HOWELL & ASSOCIATES, INC. ANY USE OR REPRODUCTION OF THESE PLANS IN WHOLE OR PART, WITHOUT THE WRITTEN PERMISSION OF D.L. HOWELL & ASSOCIATES, INC. IS FORBIDDEN.

Bowman

September 2, 2025

Mr. Dan Demeno
Township Manager
Worcester Township
1721 Valley Forge Road
P.O. Box 767
Worcester, PA 19490

Attention: Christian R. Jones, Assistant Township Manager
Mr. Robert D'Hulster, Public Works Director

RE: **Traffic Review #1 – Waiver of Land Development Plans**
Allen Myers Equipment Museum – 1805 Berks Road (S.R. 3004)
Worcester Township, Montgomery County, PA
Project No. 313982-25-006

Dear Dan:

In response to the Township's request, Bowman Consulting Group (Bowman) has completed our initial traffic engineering review associated with the waiver of land development plans for the proposed site modifications to be located at 1805 Berks Road (S.R. 3004) in Worcester Township, Montgomery County, PA. It is our understanding that the proposed site modifications will consist of constructing an 11,884 square-foot construction equipment museum which will be utilized by schools and technical schools to learn the history of construction equipment. Access to the site will continue to be provided via the existing full-movement driveway along Berks Road (S.R. 3004).

The following document was reviewed in preparation of our comments:

- Waiver of Land Development Plans – Allen Meyers Legacy Equipment Museum, prepared by Howell Engineering, dated March 10, 2025.

Based on our review of the document listed above, Bowman offers the following comments for consideration by the Township and action by the applicant:

1. The ultimate right-of-way lines and cartway width along the Berks Road (S.R. 3004) site frontage should be clearly labeled on the plans and be in accordance with **Section 130-16.C** of the **Subdivision and Land Development Ordinance.**

2. A note must be added to the plans stating that the area between legal right-of-way line and ultimate right-of-way line along the Berks Road (S.R. 3004) site frontage should be offered for dedication to the authority having jurisdiction over the road as required by **Section 130-16.C(2)(c)** of the **Subdivision and Land Development Ordinance.**

3. Sight distance measurements should be shown on the plans for the existing driveway along Berks Road (S.R. 3004) as required by **Section 130-16.E(5)** of the **Subdivision and Land Development Ordinance**. Vehicular egress sight distances looking in both directions must be provided at the driveway location, as well as for the ingressing left-turn vehicle sight distance to the front and rear, and achievable sight distances must be sufficient for the speed and conditions to allow for all ingress and egress turning movements and the driveway location as it exists/is shown on the plans. Vegetation and physical

restrictions along the property frontage must be cleared and maintained to allow for at least the minimum safe stopping distances to be achieved at 10 feet back from the edge of the road.

4. According to **Section 130-18.A** of the **Subdivision and Land Development Ordinance,** sidewalk should be provided along the site frontage of Berks Road (S.R. 3004). The plans currently do not show any sidewalk along the Berks Road (S.R. 3004) site frontage, thereby not satisfying the ordinance requirement. Due to the site improvements being minor in nature, and since there is currently no sidewalk along either side of Berks Road (S.R. 3004) in the vicinity of the site, we recommend to the Board of Supervisors to consider deferring this obligation that is required of the applicant until such a time as may be required by the Township for these subdivided properties, whether under present or future land ownership, and at no cost to Worcester Township, or the Township may desire to consider a fee in lieu of sidewalk to be kept in escrow for future sidewalk installations in the Township and/or area of these properties.

5. According to **Section 130-18.B** of the **Subdivision and Land Development Ordinance,** curbing should be provided along the site frontage of Berks Road (S.R. 3004). The plans currently do not show any curbing along the Berks Road (S.R. 3004) site frontage, thereby not satisfying the ordinance requirement. Due to the site improvements being minor in nature, and since there is currently no curbing along either side of Berks Road (S.R. 3004) in the vicinity of the site, we recommend to the Board of Supervisors to consider deferring this obligation that is required of the applicant until such a time as may be required by the Township for these subdivided properties, whether under present or future land ownership, and at no cost to Worcester Township, or the Township may desire to consider a fee in lieu of curb to be kept in escrow for future curb installations in the Township and/or area of these properties.

6. According to **Section 150-153** of the **Zoning Ordinance,** one parking space per every three seats provided for assembly is the required amount of parking for the proposed site modifications. Based on a proposed 45 seats for assembly, the proposed site modifications require 15 parking spaces. The plans currently show 25 parking spaces, thereby satisfying the ordinance requirement.

7. The plans currently show two ADA parking spaces which satisfies current ADA parking requirements.

8. The Township Fire Marshal should review the proposed site modifications for the accessibility and circulation needs of emergency apparatus. Ensure that any correspondence, including any review comments and/or approvals, is included in subsequent submissions.

9. The applicant's engineer should provide information on the purpose of the 25-foot paved opening on the northern end of the parking area on the western side of the museum.

10. Turning movements for the proposed one-way shuttle loops should be provided on the plans. Also, since the narrative for the museum mentions catering to schools, turning templates for a traditional school bus should also be shown.

11. ADA ramps should be shown on the plans in the immediate vicinity of the two ADA parking spaces on the western side of the museum.

12. We recommend that counterclockwise circulation be provided in the proposed one-way shuttle/bus loop, therefore, the following signs should be added to the plans:
    - "One-Way" signs should be provided at the beginning of the eastern end of this one-way loop.
    - "Do Not Enter" signs should be provided at the western end of this one-way loop facing the main drive aisle.

13. A "Stop" sign and stop bar should be shown on the plans at the following locations:
    - On the southbound approach of the drive aisle leading to/from the southern side of the museum at its intersection with the main drive aisle.
    - On the southbound approach of the western one-way drive aisle in the shuttle loop area at its intersection with the main drive aisle.

14. According to the Township's Roadway Sufficiency Analysis, the proposed development is located in Transportation Service Area South, which has a corresponding impact fee of $3,125 per "new" weekday afternoon peak hour trip and the applicant will be required to pay a Transportation Impact Fee in accordance with the Township's Transportation Impact Fee Ordinance. In order to determine if any applicable transportation impact fee for this project, the applicant should provide a narrative on additional operational details on the museum (i.e., specifically providing what times of the day schools/technical schools are expected to visit the museum (entering and exiting), when the meeting/training space will be used by employees already on site what weekday hours it will be open to visitors/public to use, and if this building space will result in additional employees on-site, etc.). Once this information is provided to our office, we will determine trip generation rates that may be applicable to advise the Township on our review and recommendation on a transportation impact fee for this new development project.

15. Since Berks Road (S.R. 3004) is a State roadway, a Highway Occupancy Permit (HOP) from PennDOT is required for any modifications to the site frontage within the legal right-of-way along Berks Road (S.R. 3004). The Township and our office must be copied on all applications, plan submissions, and correspondence between the applicant and PennDOT and be invited to any and all meetings between these parties.

16. Based on our review, the applicant should address the aforementioned comments and provide revised plans to the Township and our office for further review and approval recommendations. **The applicant's engineer must provide a response letter that describes how each specific review comment has been addressed, where each can be found in the plan set or materials, as opposed to general responses.** This will aid in detailed review and subsequent review timeframes.

We trust that this review letter responds to your request. If you or the Township have any questions, or require clarification, please contact me, Brian Jones, PTP, TOPS, or Anton Kuhner, P.E.

Sincerely,

Michelle Eve, P.E
Assistant Project Manager, Transportation

BMJ/MEE/AKK

cc: John Evarts, P.E., CKS Engineers (Township Engineer)
Devin Ralph, Esq. (Township Solicitor)
Mirlene Saintval, PennDOT District 6-0
Ed Mullin, Esq., HRMM & L (Applicant's Attorney)
Denny Howell, P.E., Howell Engineering (Applicant's Engineer)

V:\313982 - Worcester Twp PA\313982-25-006 (TRN) - Myers Museum\Engineering\Submissions\2025-08-01 Waiver of LD Plans\Review\2025-09-2 Review Letter #1 - Myers Museum (finalized).docx

November 7, 2025

Worcester Township Board of Supervisors
Worcester Township, Montgomery County
1721 South Valley Forge Road
Worcester, PA 19490

Re: Waiver of Land Development Request Letter **WKNAPEX No.: 2025575**
Captain Carwash
3008 W. Germantown Pike
Norristown, PA 19403

Dear Board of Supervisors,

In conjunction with the Grading Plan application for Captain Carwash, the applicant, Tom DePaul, is requesting a waiver of Land Development (Chapter 130 of the Township of Worcester Ordinance)

The project proposes the addition of five (5) parking spots with five (5) vacuum pumps at the southern end of the lot and the relocation of one (1) flagpole, totaling 1,175 square feet of proposed impervious. No further improvements are proposed. The proposed grading dictates that all runoff from the new impervious surface will be captured by the existing on site stormwater management systems.

Furthermore, if this waiver request is accepted by the Board of Supervisors, the proposed improvements would meet the Worcester Township criteria for a Stormwater Management Exemption found in *§129-5.B.(1)* (project will not be proposed in conjunction with a subdivision or land development and installing 1,200 square feet or less of cumulative impervious). The site is currently being used as a car wash, already containing eleven (11) vacuum pump stations, and no change of use is being proposed. Therefore, we believe going through the Land Development process is an unnecessary hardship for the proposed improvements.

Please see the proposed plans for supporting information regarding this waiver request. Should you have any questions regarding the project, do not hesitate to contact me at this office. Thank you for your assistance in this matter.

Sincerely,
Wilkinson Design Group, LLC

Joshua A. Castillo, P.E.
Principal Engineer

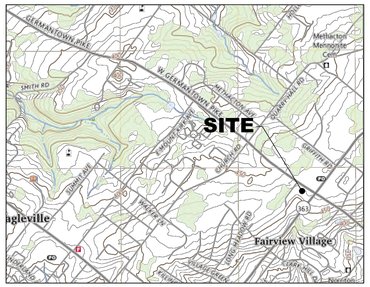

LOCATION MAP

SCALE: 1"= ±2,000'

C COMMERCIAL DISTRICT			
	REQUIRED	EXISTING	PROPOSED
MIN. LOT AREA	25,000 SF	76,081.80 SF	76,081.80 SF
MIN. LOT WIDTH	100 FT	205.25 FT	205.25 FT
MAX. BLDG. COVERAGE	30%	8.24%	8.24%
MAX. IMPERVIOUS COVERAGE	50%	46.07%	47.62%
MIN. FRONT YARD	45 FT	74.5 FT	74.5 FT
MIN. SIDE YARD	20 FT	41.3 FT	41.3 FT
MIN. REAR YARD	50 FT	106.2 FT	106.2 FT
MAX. BLDG. HEIGHT	30 FT	<30 FT	<30 FT

EXISTING IMPERVIOUS COVERAGE		
LOT	76,081.80 S.F.	1.75 AC.
BUILDING	6,271.05 S.F.	8.24%
CANAPY	120.00 S.F.	0.16%
CONCRETE & PAVING	29,688.64 S.F.	39.02%
TOTAL	36,079.69 S.F.	47.42%

PROPOSED IMPERVIOUS COVERAGE		
LOT	76,081.80 S.F.	1.75 AC.
BUILDING	6,271.05 S.F.	8.24%
CANAPY	120.00 S.F.	0.16%
CONCRETE & PAVING	30,863.64 S.F.	40.57%
TOTAL	37,254.69 S.F.	48.97%

PROPOSED LEGEND

- ULTIMATE RIGHT-OF-WAY LINE
- LOT LINE
- SETBACK LINE
- EASEMENT LINE
- CONCRETE MON./IRON PIN TO BE SET
- EDGE OF PAVEMENT
- EDGE OF GRAVEL
- CURB
- CENTERLINE
- STRIPING
- FENCE
- GUIDE/GUARD RAIL
- BUILDING
- STONE/BRICK PERVIOUS PAVER SURFACE
- CONCRETE PAVEMENT
- PAVEMENT

GRAPHIC SCALE

20 0 10 20 40 80

1 INCH = 20 FEET

NOTES:

1. THIS SITE IS KNOWN AS 3008 W GERMANTOWN PIKE, NORRISTOWN, PA 19403, WORCESTER TOWNSHIP, MONTGOMERY COUNTY, COMMONWEALTH OF PENNSYLVANIA. THE SITE IS ALSO KNOWN AS APN #67-00-00961-016 AND RECORDED IN DB 6280 PG 2454.
2. THIS PLAN IS BASED ON INFORMATION PROVIDED BY A SURVEY PREPARED IN THE FIELD BY WILKINSON & ASSOCIATES, INC., AND OTHER REFERENCE MATERIAL AS LISTED HEREON. THE SUBJECT PROPERTY MAY BE SUBJECT TO RESTRICTIONS, COVENANTS AND/OR EASEMENTS, WRITTEN OR IMPLIED, ADDITIONAL RIGHTS AND CLAIMS BY OTHERS, EITHER RECORD OR UNRECORDED THAT A THOROUGH & ACCURATE TITLE REPORT WOULD REVEAL.
3. SURVEY WAS PERFORMED WITHOUT THE BENEFIT OF A TITLE REPORT.
4. THIS PLAN IS FOR ENGINEERING DESIGN PURPOSES ONLY.
5. THE ELEVATION DATUM IS ASSUMED DATUM. BEARINGS SHOWN ON PLAN ARE AS SHOWN PER DEED.
6. NET LOT AREA = 76,081.80 SQUARE FEET OR 1.7466 ACRES.
7. LOCATION OF ALL UNDERGROUND UTILITIES ARE APPROXIMATE. ALL LOCATIONS AND SIZES ARE BASED ON UTILITY MARK-OUTS, ABOVE GROUND STRUCTURES THAT WERE VISIBLE & ACCESSIBLE IN THE FIELD, AND THE MAPS LISTED IN THE REFERENCES AVAILABLE AT THE TIME OF THE SURVEY. AVAILABLE AS-BUILT PLANS AND UTILITY MARKOUT DOES NOT ENSURE MAPPING OF ALL UNDERGROUND UTILITIES AND STRUCTURES. BEFORE ANY EXCAVATION IS TO BEGIN, ALL UNDERGROUND UTILITIES SHOULD BE VERIFIED AS TO THEIR LOCATION, SIZE AND TYPE BY THE PROPER UTILITY COMPANIES
8. THE SUBJECT PROPERTY IS NOT LOCATED WITHIN ANY FLOOD PLAIN AS ILLUSTRATED ON COMMUNITY PANEL 42091C0245G, WITH AN EFFECTIVE DATE OF MARCH 2, 2016, AS PREPARED BY THE FEDERAL EMERGENCY MANAGEMENT AGENCY. NO COMPUTATIONAL FLOOD PLAIN STUDY HAS BEEN PERFORMED AS A PART OF THIS PLAN PREPARATION.
9. COPYRIGHT ©2025. WILKINSON & ASSOCIATES, INC. ALL RIGHTS RESERVED. NO PART OF THIS DRAWING MAY BE REPRODUCED BY PHOTOCOPYING, RECORDING OR BY ANY OTHER MEANS, OR STORED, PROCESSED, OR TRANSMITTED IN OR BY ANY COMPUTER OR OTHER SYSTEMS WITHOUT THE PRIOR WRITTEN PERMISSION OF THE SURVEYOR, OR OTHER SYSTEMS WITHOUT THE PRIOR WRITTEN PERMISSION OF THE SURVEYOR.

STATEMENT OF INTENT

THE PURPOSE OF THIS PROJECT IS TO INSTALL FIVE (5) NEW PARKING SPACES, EACH OF WHICH HAVING A VEHICLE VACUUM STATION. THE TOTAL IMPERVIOUS SURFACE PROPOSED FOR THIS PROJECT IS 1,175 SF.

SHEET INDEX

1 OF 4 LAYOUT PLAN
2 OF 4 EXISTING CONDITIONS/DEMO PLAN
3 OF 4 GRADING AND UTILITY PLAN
4 OF 4 DETAILS AND NOTES PLAN

811

Dial 8-1-1 or 1-800-242-1776 not less than 3 business days nor more than 10 business days prior to the start of excavation.

Coordinate your projects via Coordinate PA at www.paonecall.org.

Pennsylvania One Call System Serial Number

20252722310

REV	DATE	DESCRIPTION	BY

SEAL: COMMONWEALTH OF PENNSYLVANIA REGISTERED PROFESSIONAL JOSHUA A. CARNEY ENGINEER PE-084861

PROJECT: **CAPTAIN CARWASH NORRISTOWN, PA 19403**

WORCESTER TOWNSHIP MONTGOMERY COUNTY PENNSYLVANIA

PREPARED FOR: **TOM DEPAUL CAPTAIN CARWASH 3008 W. GERMANTOWN PIKE NORRISTOWN, PA 19403**

PLAN TITLE: **PRELIMINARY LAND DEVELOPMENT PLAN**

SHEET TITLE: **LAYOUT PLAN**

PREPARED BY:

WILKINSON DESIGN GROUP, LLC

374 CIRCLE OF PROGRESS DRIVE

POTTSTOWN, PA 19464 / 610-323-3400

DESIGNED	PROJECT #
MAL	2025-575
CHECKED (PM) JAC	
DATE 09-02-2025	SHEET # 1 OF 4
SCALE 1" = 20'	

J:\PROJECTS\2025\2025575 Captain Car Wash\CAD\2025575-LD SET.dwg

EXISTING LEGEND

- TRACT (SITE) BOUNDARY
- LEGAL RIGHT-OF-WAY LINE
- ADJOINING ROW / LOT LINE
- CENTERLINE
- ZONE CHANGE LINE
- EASEMENT LINE
- EDGE OF PAVEMENT
- EDGE OF GRAVEL
- CURB
- STREAM CL / BANK
- STRIPING
- FENCE (CHAIN LINK)
- FENCE (OTHER)
- GUIDE/GUARD RAIL
- BUILDING
- APPROXIMATE DATA PER AERIAL IMAGERY (FOR ORIENTATIONAL PURPOSES ONLY)
- TREE / TREE T.B.R.
- CONCRETE
- WETLAND BOUNDARY
- MAJOR ELEVATION CONTOUR
- MINOR ELEVATION CONTOUR
- 15.00%-25.00% STEEP SLOPES
- >25% STEEP SLOPES
- UgB UgD — SOIL BOUNDARY AND DESIGNATION
- TREELINE
- 115.50 — SPOT ELEVATION
- IRON PIN
- SURVEY MONUMENT
- STORM INLETS
- STORM MANHOLE
- SANITARY MANHOLE
- UTILITY POLE W/ GUY ANCHOR
- CLEAN OUT
- SIGN
- HYDRANT / WATER VALVE
- CABLE
- SANITARY SEWER
- SANITARY FORCE MAIN
- STORM SEWER
- ELECTRIC SERVICE
- WATER PIPE
- IRRIGATION PIPE
- GAS SERVICE
- UNDERGROUND TELEPHONE LINE
- OVERHEAD UTILITY LINE
- FEMA FLOODWAY BOUNDARY
- FEMA FLOODPLAIN BOUNDARY
- MISCELLANEOUS UTILITY LINE(S)

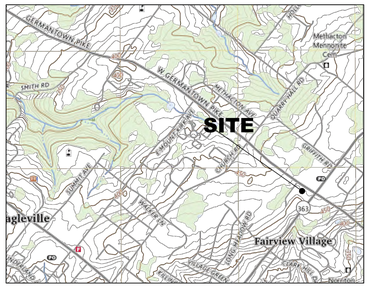

LOCATION MAP

SCALE: 1"= ±2,000'

NOTES:

1. THIS SITE IS KNOWN AS 3008 W GERMANTOWN PIKE, NORRISTOWN, PA 19403, WORCESTER TOWNSHIP, MONTGOMERY COUNTY, COMMONWEALTH OF PENNSYLVANIA. THE SITE IS ALSO KNOWN AS APN #67-00-00961-016 AND RECORDED IN DB 6280 PG 2454.
2. THIS PLAN IS BASED ON INFORMATION PROVIDED BY A SURVEY PREPARED IN THE FIELD BY WILKINSON & ASSOCIATES, INC., AND OTHER REFERENCE MATERIAL AS LISTED HEREON. THE SUBJECT PROPERTY MAY BE SUBJECT TO RESTRICTIONS, COVENANTS AND/OR EASEMENTS, WRITTEN OR IMPLIED, ADDITIONAL RIGHTS AND CLAIMS BY OTHERS, EITHER RECORD OR UNRECORDED THAT A THOROUGH & ACCURATE TITLE REPORT WOULD REVEAL.
3. SURVEY WAS PERFORMED WITHOUT THE BENEFIT OF A TITLE REPORT.
4. THIS PLAN IS FOR ENGINEERING DESIGN PURPOSES ONLY.
5. THE ELEVATION DATUM IS ASSUMED DATUM. BEARINGS SHOWN ON PLAN ARE AS SHOWN PER DEED.
6. NET LOT AREA = 76,081.80 SQUARE FEET OR 1.7466 ACRES.
7. LOCATION OF ALL UNDERGROUND UTILITIES ARE APPROXIMATE. ALL LOCATIONS AND SIZES ARE BASED ON UTILITY MARK-OUTS, ABOVE GROUND STRUCTURES THAT WERE VISIBLE & ACCESSIBLE IN THE FIELD, AND THE MAPS LISTED IN THE REFERENCES AVAILABLE AT THE TIME OF THE SURVEY. AVAILABLE AS-BUILT PLANS AND UTILITY MARKOUT DOES NOT ENSURE MAPPING OF ALL UNDERGROUND UTILITIES AND STRUCTURES. BEFORE ANY EXCAVATION IS TO BEGIN, ALL UNDERGROUND UTILITIES SHOULD BE VERIFIED AS TO THEIR LOCATION, SIZE AND TYPE BY THE PROPER UTILITY COMPANIES
8. THE SUBJECT PROPERTY IS NOT LOCATED WITHIN ANY FLOOD PLAIN AS ILLUSTRATED ON COMMUNITY PANEL 42091C0245G, WITH AN EFFECTIVE DATE OF MARCH 2, 2016, AS PREPARED BY THE FEDERAL EMERGENCY MANAGEMENT AGENCY. NO COMPUTATIONAL FLOOD PLAIN STUDY HAS BEEN PERFORMED AS A PART OF THIS PLAN PREPARATION.
9. COPYRIGHT ©2025. WILKINSON & ASSOCIATES, INC. ALL RIGHTS RESERVED. NO PART OF THIS DRAWING MAY BE REPRODUCED BY PHOTOCOPYING, RECORDING OR BY ANY OTHER MEANS, OR STORED, PROCESSED, OR TRANSMITTED IN OR BY ANY COMPUTER OR OTHER SYSTEMS WITHOUT THE PRIOR WRITTEN PERMISSION OF THE SURVEYOR, OR OTHER SYSTEMS WITHOUT THE PRIOR WRITTEN PERMISSION OF THE SURVEYOR.

EXISTING IMPERVIOUS COVERAGE		
LOT	76,081.80 S.F.	1.75 AC.
BUILDING	6,271.05 S.F.	8.24%
CANAPY	120.00 S.F.	0.16%
CONCRETE & PAVING	29,688.64 S.F.	39.02%
TOTAL	36,079.69 S.F.	47.42%

811

Dial 8-1-1 or 1-800-242-1776 not less than 3 business days nor more than 10 business days prior to the start of excavation.

Coordinate your projects via Coordinate PA at www.paonecall.org.

Pennsylvania One Call System Serial Number

20252722310

REV	DATE	DESCRIPTION	BY

SEAL: COMMONWEALTH OF PENNSYLVANIA REGISTERED PROFESSIONAL ENGINEER JOSHUA J. CARROLL PE-084861

PROJECT: **CAPTAIN CARWASH NORRISTOWN, PA 19403**
WORCESTER TOWNSHIP MONTGOMERY COUNTY PENNSYLVANIA

PREPARED FOR: **TOM DEPAUL CAPTAIN CARWASH 3008 W. GERMANTOWN PIKE NORRISTOWN, PA 19403**

PLAN TITLE: **PRELIMINARY LAND DEVELOPMENT PLAN**

SHEET TITLE: **EXISTING CONDITIONS/ DEMO PLAN**

PREPARED BY: WILKINSON DESIGN GROUP, LLC
374 CIRCLE OF PROGRESS DRIVE
POTTSTOWN, PA 19464 / 610-323-3400

DESIGNED	PROJECT #
MAL	2025-575
CHECKED (PM) JAC	
DATE 09-02-2025	SHEET # 2 OF 4
SCALE 1" = 20'	

A:\PROJECTS\2025\2025575 Captain Car Wash\CAD\2025575-LD SET.dwg

PROPOSED LEGEND

- ULTIMATE RIGHT-OF-WAY LINE
- LOT LINE
- SETBACK LINE
- EASEMENT LINE
- CONCRETE MON./IRON PIN TO BE SET
- EDGE OF PAVEMENT
- EDGE OF GRAVEL
- CURB
- CENTERLINE
- STRIPING
- FENCE
- GUIDE/GUARD RAIL
- FLOODWAY LINE
- RIPARIAN BUFFER
- RIPARIAN BUFFER ZONE
- STREAM BUFFER LINE
- WETLAND BUFFER LINE
- ZONING IMPERVIOUS SURFACE
- BUILDING
- STONE/BRICK PERVIOUS PAVER SURFACE
- CONCRETE PAVEMENT
- HEAVY DUTY PAVEMENT
- LIGHTY DUTY PAVEMENT
- GREENWAY OPEN SPACE
- TREE LINE
- TRAIL
- PROPOSED SAW-CUT LINE
- TRAFFIC SIGN
- SANITARY SEWER MANHOLE
- STORM SEWER INLET
- STORM SEWER YARD INLET
- STORM SEWER MANHOLE
- STORM SEWER ENDWALL W/ FLARED END SECTION
- WATER VALVE
- FIRE HYDRANT
- LAMP – LANTERN TYPE
- LAMP – POLE-MOUNTED
- LAMP – WALL-MOUNTED
- UTILITY POLE
- ELEVATION CONTOUR, MAJOR
- ELEVATION CONTOUR, MINOR
- SPOT ELEVATION (590.30)
- SURFACE FLOW ARROW
- TREE LINE
- SEPTIC DISPOSAL FIELD
- TP-10 575610 — STORMWATER DESIGN SOIL INFILTRATION TEST PIT (TEST DEPTH/ELEVATION)
- TP-119 — SANITARY DESIGN SOIL PERCOLATION TEST PIT
- STORM SEWER
- ROOF LEADER W/ CLEANOUT
- SANITARY GRAVITY SEWER
- SANITARY FORCE MAIN SEWER
- WATER PIPE
- ELECTRIC LINE
- GAS LINE
- TELECOM
- OVERHEAD LINE(S)
- MISCELLANEOUS UTILITY LINE(S)

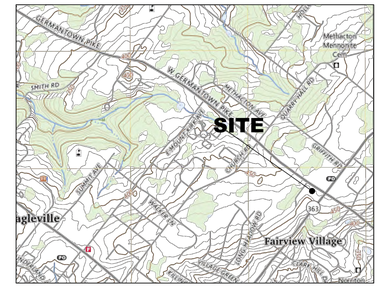

LOCATION MAP

SCALE: 1"= ±2,000'

GRADING & DRAINAGE NOTES

1. SITE GRADING SHALL BE PERFORMED IN ACCORDANCE WITH THESE PLANS AND SPECIFICATIONS. THE CONTRACTOR SHALL BE RESPONSIBLE FOR REMOVING AND REPLACING ALL SOFT, YELDING OR UNSUITABLE MATERIALS AND REPLACING WITH SUITABLE MATERIALS AS SPECIFIED IN THE SOILS REPORT. ALL EXCAVATED OR FILLED AREAS SHALL BE COMPACTED TO 95% OF MODIFIED PROCTOR MAXIMUM DENSITY PER A.S.T.M. TEST D-1557.
2. CONTRACTOR IS RESPONSIBLE FOR VERIFICATION OF EXISTING TOPOGRAPHIC INFORMATION AND UTILITY INVERT ELEVATIONS PRIOR TO COMMENCEMENT OF ANY CONSTRUCTION. CONTRACTOR TO ENSURE 0.75 MIN. SLOPE AGAINST ALL CURBS, ISLANDS AND GUTTERS, AND 1.0% MIN. ON ASPHALT, TO PREVENT PONDING. ANY DISCREPANCIES THAT MAY AFFECT THE PUBLIC SAFETY OR PROJECT COST, MUST BE IDENTIFIED TO THE ENGINEER IN WRITING IMMEDIATELY. PROCEEDING WITH ANY CONSTRUCTION HAVING DESIGN DISCREPANCIES IS DONE SO AT THE CONTRACTOR'S OWN RISK.
3. PROPOSED TOP OF CURB ELEVATIONS ARE GENERALLY 6" ABOVE EXISTING LOCAL ASPHALT GRADE. FIELD GRADE TO CREATE A MIN. OF 0.75% GRADE ALONG CURB FACE. ENGINEER TO APPROVE FINAL CURBING CUT SHEETS PRIOR TO INSTALLATION.
4. IT SHALL BE THE CONTRACTOR'S RESPONSIBILITY TO NOTIFY UTILITY "ONE-CALL" NUMBER 72 HOURS PRIOR TO ANY EXCAVATION ON THIS SITE. CONTRACTOR SHALL ALSO NOTIFY LOCAL WATER & SEWER DEPARTMENTS TO MARK OUT THEIR UTILITIES.
5. SUBBASE MATERIAL FOR SIDEWALKS, CURB, OR ASPHALT SHALL BE FREE OF ORGANICS AND OTHER UNSUITABLE MATERIALS. SHOULD SUBBASE BE DEEMED UNSUITABLE, SUBBASE IS TO BE REMOVED AND FILLED WITH APPROVED FILL MATERIAL COMPACTED TO 95% OPTIMUM DENSITY (AS DETERMINED BY MODIFIED PROCTOR METHOD).
6. ALL DISTURBED AREAS, OTHER THAN PROPOSED PAVED AREAS, SHALL BE STABILIZED WITH TOPSOIL TO A DEPTH OF EIGHT (8) INCHES. THE TOPSOIL SHALL BE FREE OF ALL DEBRIS, ROOTS AND OTHER OBJECTS THAT MIGHT INTERFERE WITH PROPOSED PLANTING, FERTILIZING, OR MAINTENANCE OPERATIONS.
7. ALL PROPOSED SPOT ELEVATIONS ARE EITHER BOTTOM OF CURB OR FINISHED GROUND UNLESS OTHERWISE NOTED.
8. THE CONTRACTOR(S) SHALL NOT ENCROACH ONTO ADJOINING PROPERTIES UNLESS A TEMPORARY CONSTRUCTION EASEMENT HAS BEEN GRANTED BY ADJOINING PROPERTY OWNER. CONTRACTOR SHALL HAVE PROPERTY LINES CLEARLY MARKED IN AREAS WHERE GRADING WILL ENCROACH WITHIN FIVE FEET OF THE PROPERTY LINE AND SHALL CONSTRUCT SUCH BARRIERS WHICH ARE NECESSARY TO PREVENT ENCROACHMENT ONTO ADJOINING PROPERTIES.
9. ALL CONTRACTORS WORKING ON THIS PROJECT SHALL BE RESPONSIBLE FOR ENSURING THAT ALL CONSTRUCTION ACTIVITIES RELATED TO THIS PROJECT ARE PERFORMED IN ACCORDANCE WITH ALL APPLICABLE OSHA (OCCUPATIONAL SAFETY AND HEALTH ADMINISTRATION) STANDARDS.
10. NO FINISHED GRADE EXCAVATION OR FILL SLOPE SHALL EXCEED 3:1 (HORIZONTAL TO VERTICAL).
11. DRAINAGE FACILITIES AND EROSION AND SEDIMENTATION CONTROL MEASURES SHALL BE IN PLACE AND FUNCTIONING PRIOR TO BEGINNING OF EARTH DISTURBANCE AND/OR THE CREATION OF ANY ADDITIONAL IMPERVIOUS SURFACE.
12. ALL CONSTRUCTION SHALL BE IN ACCORDANCE WITH THE REQUIREMENTS OF WORCESTER TOWNSHIP AND PENNDOT PUBLICATION 408, LATEST EDITION.
13. A MINIMUM OF EIGHT (8) INCHES OF TOPSOIL SHALL BE REDISTRIBUTED OVER ALL DISTURBED AREAS OF THE SITE, WITH THE EXCEPTION OF PAVED AND PROPOSED BUILDING AREAS.
14. ALL MAINTENANCE FOR THE STORMWATER MANAGEMENT FACILITIES SHALL BE PROVIDED BY THE OWNER.
15. ALTHOUGH NOT ANTICIPATED, THE CONTRACTOR SHALL BE RESPONSIBLE FOR DE-WATERING OF SITE FOR CONSTRUCTION IF NEEDED. THIS INCLUDES LABOR AND MATERIALS ASSOCIATED WITH PUMPING WATER WHICH MAY REMAIN BELOW THE INVERT OUT ELEVATION OF PERMANENT STORMWATER MANAGEMENT FACILITY. IF SEDIMENT LADEN WATER IS PUMPED, IT SHALL BE THROUGH THE USE OF A PADEP FILTER BAG.
16. THE CONTRACTOR SHALL TAKE MEASURES TO AVOID UNNECESSARY COMPACTION OF SOILS IN DISTURBED AREAS AS WELL AS MINIMIZE DISTURBANCE TO ONLY THE AREAS SHOWN WITHIN THE LIMIT OF DISTURBANCE PER THE PLAN.
17. EXISTING TOPOGRAPHY HAS BEEN SUPPLEMENTED BY LIDAR CONTOURS EXTRACTED FROM PASDA
18. PROPOSED IMPERVIOUS (5 PARKING SPOTS) = 1,175.00 SF

C COMMERCIAL DISTRICT			
	REQUIRED	EXISTING	PROPOSED
MIN. LOT AREA	25,000 SF	76,081.80 SF	76,081.80 SF
MIN. LOT WIDTH	100 FT	205.25 FT	205.25 FT
MAX. BLDG. COVERAGE	30%	8.24%	8.24%
MAX. IMPERVIOUS COVERAGE	50%	46.07%	47.62%
MIN. FRONT YARD	45 FT	74.5 FT	74.5 FT
MIN. SIDE YARD	20 FT	41.3 FT	41.3 FT
MIN. REAR YARD	50 FT	106.2 FT	106.2 FT
MAX. BLDG. HEIGHT	30 FT	<30 FT	<30 FT

EXISTING IMPERVIOUS COVERAGE		
LOT	76,081.80 S.F.	1.75 AC.
BUILDING	6,271.05 S.F.	8.24%
CANAPY	120.00 S.F.	0.16%
CONCRETE & PAVING	29,688.64 S.F.	39.02%
TOTAL	36,079.69 S.F.	47.42%

PROPOSED IMPERVIOUS COVERAGE		
LOT	76,081.80 S.F.	1.75 AC.
BUILDING	6,271.05 S.F.	8.24%
CANAPY	120.00 S.F.	0.16%
CONCRETE & PAVING	30,863.64 S.F.	40.57%
TOTAL	37,254.69 S.F.	48.97%

GRAPHIC SCALE

20 0 10 20 40 80

1 INCH = 20 FEET

Dial 8-1-1 or 1-800-242-1776 not less than 3 business days nor more than 10 business days prior to the start of excavation.

Coordinate your projects via Coordinate PA at www.paonecall.org.

Pennsylvania One Call System Serial Number

20252722310

REV	DATE	DESCRIPTION	BY

SEAL: COMMONWEALTH OF PENNSYLVANIA REGISTERED PROFESSIONAL JOSHUA A. CASTELLO ENGINEER PE-085861

PROJECT:
CAPTAIN CARWASH
NORRISTOWN, PA 19403
WORCESTER TOWNSHIP MONTGOMERY COUNTY PENNSYLVANIA

PREPARED FOR:
TOM DEPAUL
CAPTAIN CARWASH
3008 W. GERMANTOWN PIKE
NORRISTOWN, PA 19403

PLAN TITLE:
PRELIMINARY LAND DEVELOPMENT PLAN

SHEET TITLE:
GRADING & UTILITIES PLAN

PREPARED BY:
WILKINSON DESIGN GROUP, LLC
374 CIRCLE OF PROGRESS DRIVE
POTTSTOWN, PA 19464 / 610-323-3400

DESIGNED	PROJECT #
MAL	2025-575
CHECKED (PM) JAC	
DATE 09-02-2025	SHEET # 3 OF 4
SCALE 1" = 20'	

A:\PROJECTS\2025\2025575 Captain Car Wash\CAD\2025575-LD SET.dwg

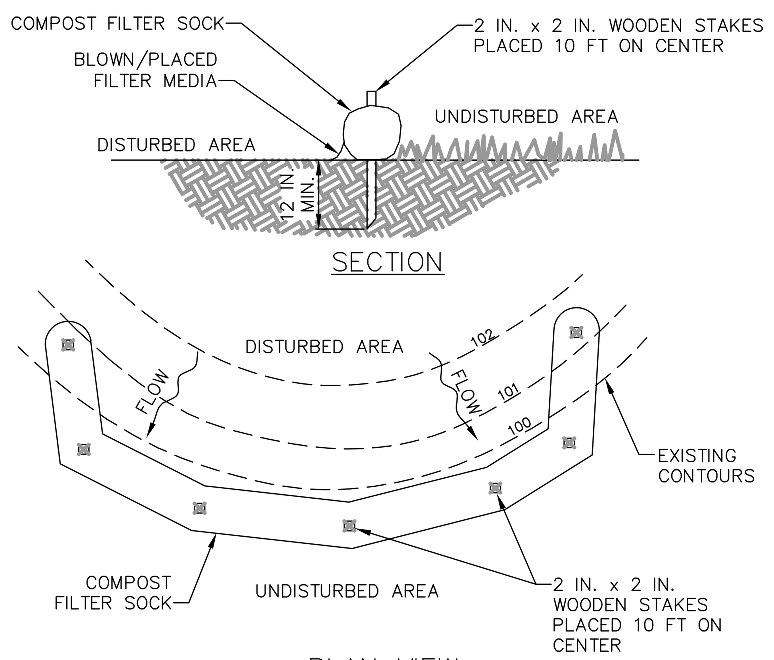

NOTES:

SOCK FABRIC SHALL MEET STANDARDS OF TABLE 4.1 OF THE PA DEP EROSION CONTROL MANUAL. COMPOST SHALL MEET THE STANDARDS OF TABLE 4.2 OF THE PA DEP EROSION CONTROL MANUAL.

COMPOST FILTER SOCK SHALL BE PLACED AT EXISTING LEVEL GRADE. BOTH ENDS OF THE BARRIER SHALL BE EXTENDED AT LEAST 8 FEET UP SLOPE AT 45 DEGREES TO THE MAIN BARRIER ALIGNMENT. MAXIMUM SLOPE LENGTH ABOVE ANY BARRIER SHALL NOT EXCEED THAT SPECIFIED FOR THE SIZE OF THE SOCK AND THE SLOPE OF ITS TRIBUTARY AREA.

TRAFFIC SHALL NOT BE PERMITTED TO CROSS COMPOST FILTER SOCKS.

ACCUMULATED SEDIMENT SHALL BE REMOVED WHEN IT REACHES 1/2 THE ABOVE GROUND HEIGHT OF THE BARRIER AND DISPOSED IN THE MANNER DESCRIBED ELSEWHERE IN THE PLAN.

COMPOST FILTER SOCKS SHALL BE INSPECTED WEEKLY AND AFTER EACH RUNOFF EVENT. DAMAGED SOCKS SHALL BE REPAIRED ACCORDING TO MANUFACTURER'S SPECIFICATIONS OR REPLACED WITHIN 24 HOURS OF INSPECTION.

BIODEGRADABLE COMPOST FILTER SOCKS SHALL BE REPLACED AFTER 6 MONTHS; PHOTODEGRADABLE SOCKS AFTER 1 YEAR. POLYPROPYLENE SOCKS SHALL BE REPLACED ACCORDING TO MANUFACTURER'S RECOMMENDATIONS.

UPON STABILIZATION OF THE AREA TRIBUTARY TO THE SOCK, STAKES SHALL BE REMOVED. THE SOCK MAY BE LEFT IN PLACE AND VEGETATED OR REMOVED. IN THE LATTER CASE, THE MESH SHALL BE CUT OPEN AND THE MULCH SPREAD AS A SOIL SUPPLEMENT.

STANDARD CONSTRUCTION DETAIL #4-1
COMPOST FILTER SOCK

NOT TO SCALE

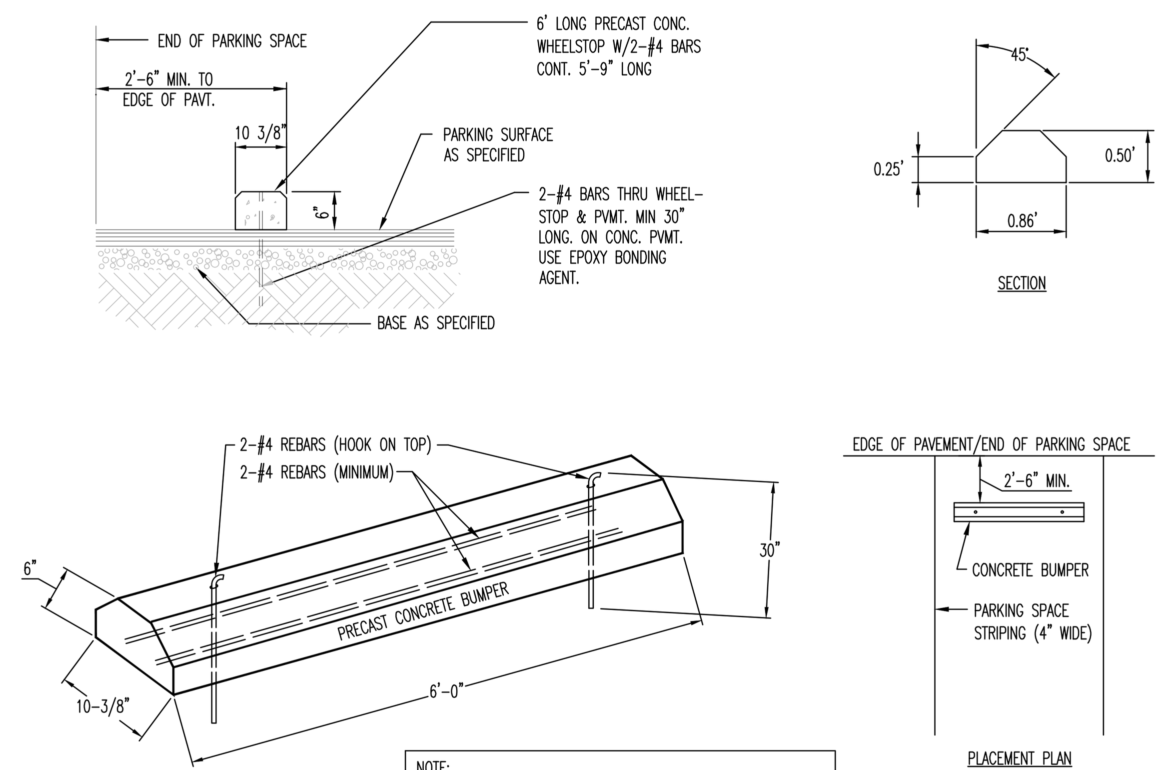

NOTE:
REFER TO PLAN SET FOR LOCATIONS OF PROPOSED WHEELSTOPS.

CONCRETE WHEEL STOP DETAIL

NO SCALE

SEQUENCE OF CONSTRUCTION:

ALL EARTH DISTURBANCE ACTIVITIES SHALL PROCEED IN ACCORDANCE WITH THE FOLLOWING SEQUENCE. EACH STAGE SHALL BE COMPLETED BEFORE ANY FOLLOWING STAGE IS INITIATED, UNLESS NOTED OTHERWISE. CLEARING AND GRUBBING SHALL BE LIMITED ONLY TO THOSE AREAS DESCRIBED IN EACH STAGE.

AT LEAST 7 DAYS PRIOR TO START OF WORK OR EARTH DISTURBANCE ACTIVITIES, A PRE-CONSTRUCTION MEETING SHALL BE HELD INCLUDING THE OWNER, SITE CONTRACTOR, TOWNSHIP ENGINEER, COUNTY CONSERVATION DISTRICT (IF REQUIRED) AND THE PLAN DESIGNER.

1. INSTALL COMPOST SOCK, INLET PROTECTION AND TREE PROTECTION FENCE(S) AS NECESSARY AND WHERE INDICATED ON THE PLANS AND ESTABLISH THE LIMITS OF DISTURBANCE.
2. SAW CUT CURBING, DEMO AND REMOVED EXISTING CURB IN THE WORK AREA FOR PROPOSED PARKING/VACUUM STATION AREA.
3. RELOCATE THE FLAG POLE AS SHOWN ON THE PLAN.
4. EXCAVATE WORK AREA AND INSTALL POWER LINE TO PROPOSED PARKING/VACUUM STATION AREA.
5. INSTALL SUBBASE STONE, INSTALL BITUMINOUS CONCRETE BASE COURSE (BCBC).
6. INSTALL VEHICLE VACUUM STATIONS.
7. FINISH GRADE LAWN AREAS. AS LAWN AREAS ARE BROUGHT TO GRADE, ALL VEGETATED AREAS SHALL BE STABILIZED WITH SEED AND MULCH IMMEDIATELY.
8. AFTER THE SITE HAS BEEN STABILIZED TO THE SATISFACTION OF THE TOWNSHIP AND DESIGN ENGINEER, ALL TEMPORARY E&S CONTROLS SHALL BE REMOVED.
   A. ALL ACCUMULATED SEDIMENTS SHALL BE DISPOSED OF IN APPROVED UPLAND AREAS.
   B. STABILIZATION SHALL BE CONSIDERED THE PLACEMENT OF BASE COURSE IN PAVED AREAS OR BY 75% OR MORE VEGETATION, UNIFORM COVERAGE, IN LAWN AREAS OR BY OTHER PERMANENT MEANS WITH A DENSITY SUFFICIENT TO RESIST ACCELERATED SURFACE EROSION AND SUBSURFACE CHARACTERISTICS SUFFICIENT TO RESIST SLIDING AND OTHER MOVEMENTS.
   C. AREAS DISTURBED DURING THE REMOVAL OF BMPS SHALL BE STABILIZED IMMEDIATELY.

STANDARD E&SC PLAN NOTES

THE FOLLOWING STANDARD E&S PLAN NOTES ARE TAKEN FROM THE PADEP EROSION AND SEDIMENT POLLUTION CONTROL PROGRAM MANUAL. ANY STANDARD E&S PLAN NOTES NOT FOUND IN THIS SECTION ARE LOCATED ON THIS SHEET IN THE SECTION DEEMED MOST APPROPRIATE BY THE DESIGN ENGINEER:

1. ALL EARTH DISTURBANCES, INCLUDING CLEARING AND GRUBBING AS WELL AS CUTS AND FILLS SHALL BE DONE IN ACCORDANCE WITH THE APPROVED E&S PLAN. A COPY OF THE APPROVED DRAWINGS (STAMPED, SIGNED AND DATED BY THE REVIEWING AGENCY) MUST BE AVAILABLE AT THE PROJECT SITE AT ALL TIMES. THE REVIEWING AGENCY SHALL BE NOTIFIED OF ANY CHANGES TO THE APPROVED PLAN PRIOR TO IMPLEMENTATION OF THOSE CHANGES. THE REVIEWING AGENCY MAY REQUIRE A WRITTEN SUBMITTAL OF THOSE CHANGES FOR REVIEW AND APPROVAL AT ITS DISCRETION.
2. AT NO TIME SHALL CONSTRUCTION VEHICLES BE ALLOWED TO ENTER AREAS OUTSIDE THE LIMIT OF DISTURBANCE BOUNDARIES SHOWN ON THE PLAN MAPS. THESE AREAS MUST BE CLEARLY MARKED AND FENCED OFF BEFORE CLEARING AND GRUBBING OPERATIONS BEGIN.
3. TOPSOIL REQUIRED FOR THE ESTABLISHMENT OF VEGETATION SHALL BE STOCKPILED AT THE LOCATION(S) SHOWN ON THE PLAN MAPS(S) IN THE AMOUNT NECESSARY TO COMPLETE THE FINISH GRADING OF ALL EXPOSED AREAS THAT ARE TO BE STABILIZED BY VEGETATION. EACH STOCKPILE SHALL BE PROTECTED IN THE MANNER SHOWN ON THE PLAN DRAWINGS. STOCKPILE HEIGHTS MUST NOT EXCEED 35'. STOCKPILE SLOPES MUST BE 2H:1V OR FLATTER.
4. IMMEDIATELY UPON DISCOVERING UNFORESEEN CIRCUMSTANCES POSING THE POTENTIAL FOR ACCELERATED EROSION AND/OR SEDIMENT POLLUTION, THE OPERATOR SHALL IMPLEMENT APPROPRIATE BMPS TO MINIMIZE THE POTENTIAL FOR EROSION AND SEDIMENT POLLUTION AND NOTIFY THE LOCAL CONSERVATION DISTRICT AND/OR THE REGIONAL OFFICE OF DEP.
5. THE CONTRACTOR IS RESPONSIBLE FOR ENSURING THAT ANY MATERIAL BROUGHT ON SITE IS CLEAN FILL. FORM FP-001 MUST BE RETAINED BY THE PROPERTY OWNER FOR ANY FILL MATERIAL AFFECTED BY A SPILL OR RELEASE OF A REGULATED SUBSTANCE BUT QUALIFYING AS CLEAN FILL DUE TO ANALYTICAL TESTING. SEE NPDES PERMIT NOTES, NOTE 6, FOR FURTHER INSTRUCTIONS.
6. ALL PUMPING OF WATER FROM ANY WORK AREA SHALL BE DONE ACCORDING TO THE PROCEDURE DESCRIBED IN THIS PLAN, OVER UNDISTURBED VEGETATED AREAS. ALL PUMPING OF SEDIMENT-LADEN WATER SHALL BE THROUGH A DIRTBAG FILTRATION DEVICE OR EQUIVALENT SEDIMENT REMOVAL FACILITY. DISCHARGE POINTS SHOULD PROVIDE FOR MAXIMUM DISTANCE TO ACTIVE WATERWAYS.
7. VEHICLES AND EQUIPMENT MAY NEITHER ENTER DIRECTLY NOR EXIT DIRECTLY FROM ANY AREAS NOT DESIGNATED AS A CONSTRUCTION ENTRANCE AND/OR THAT ARE NOT LOCATED WITHIN THE APPROVED LIMIT OF DISTURBANCE.
8. SEDIMENT TRACKED ONTO ANY PUBLIC ROADWAY OR SIDEWALK SHALL BE RETURNED TO THE CONSTRUCTION SITE BY THE END OF EACH WORK DAY AND DISPOSED IN THE MANNER DESCRIBED IN THIS PLAN. IN NO CASE SHALL THE SEDIMENT BE WASHED, SHOVELED, OR SWEPT INTO ANY ROADSIDE DITCH, STORM SEWER, OR SURFACE WATER.
9. E&S BMPS SHALL REMAIN FUNCTIONAL AS SUCH UNTIL ALL AREAS TRIBUTARY TO THEM ARE PERMANENTLY STABILIZED OR UNTIL THEY ARE REPLACED BY ANOTHER BMP APPROVED BY THE LOCAL CONSERVATION DISTRICT OR DEP.
10. UPON COMPLETION OF ALL EARTH DISTURBANCE ACTIVITIES AND PERMANENT STABILIZATION OF ALL DISTURBED AREAS, THE OWNER AND/OR OPERATOR SHALL CONTACT THE LOCAL CONSERVATION DISTRICT FOR A FINAL INSPECTION PRIOR TO REMOVAL/CONVERSION OF THE E&S BMPS.
11. AFTER FINAL SITE STABILIZATION HAS BEEN ACHIEVED, TEMPORARY E&S BMPS MUST BE REMOVED OR CONVERTED TO PERMANENT POST-CONSTRUCTION STORMWATER MANAGEMENT BMPS. AREAS DISTURBED DURING REMOVAL OR CONVERSION OF THE BMPS MUST BE STABILIZED IMMEDIATELY. IN ORDER TO ENSURE RAPID REVEGETATION OF DISTURBED AREAS, SUCH REMOVAL/CONVERSIONS SHOULD BE DONE ONLY DURING THE GERMINATING SEASON.
12. UPON COMPLETION OF ALL EARTH DISTURBANCE ACTIVITIES AND PERMANENT STABILIZATION OF ALL DISTURBED AREAS, THE OWNER AND/OR OPERATOR SHALL CONTACT THE LOCAL CONSERVATION DISTRICT TO SCHEDULE A FINAL INSPECTION.
13. FAILURE TO CORRECTLY INSTALL E&S BMPS, FAILURE TO PREVENT SEDIMENT-LADEN RUNOFF FROM LEAVING THE CONSTRUCTION SITE, OR FAILURE TO TAKE IMMEDIATE CORRECTIVE ACTION TO RESOLVE FAILURE OF E&S BMPS MAY RESULT IN ADMINISTRATIVE, CIVIL, AND/OR CRIMINAL PENALTIES BEING INSTITUTED BY THE PENNSYLVANIA DEPARTMENT OF ENVIRONMENTAL PROTECTION AS DEFINED IN SECTION 602 OF THE PENNSYLVANIA CLEAN STREAMS LAW. THE CLEAN STREAMS LAW PROVIDES FOR UP TO $10,000 PER DAY IN CIVIL PENALTIES, UP TO $10,000 IN SUMMARY CRIMINAL PENALTIES, AND UP TO $25,000 IN MISDEMEANOR CRIMINAL PENALTIES FOR EACH VIOLATION.

SEEDING, TEMPORARY AND PERMANENT

a) TEMPORARY SEEDING SHALL BE PERFORMED ON ALL DISTURBED SOIL AREAS WITHIN IMMEDIATELY AFTER THE END OF THE GROWING SEASON, AND ON ALL DISTURBED SOIL AREAS IN WHICH ACTIVITIES HAVE CEASED AND WHICH WILL REMAIN EXPOSED. MINIMUM SPECIFICATIONS ARE AS FOLLOWS:

- SPRING AND SUMMER SEEDING: 100% ANNUAL RYEGRASS (LOLIUM MULTIFLORUM) [98% PURITY, 90% GERMINATION, APPLIED AT 48 LBS/ACRE.]
- FALL SEEDING: WINTER RYE (TETRA PETKUS) [98% PURITY, 85% GERMINATION, APPLIED AT 168 LBS/ACRE.]

b) PERMANENT SEEDING BE PERFORMED ON ALL DISTURBED SOIL AREAS THAT ARE AT FINISHED GRADE, AND ALL DISTURBED SOIL AREAS THAT WILL NOT BE DISTURBED WITHIN ONE YEAR. MINIMUM SPECIFICATIONS ARE AS FOLLOWS:

- MOWED AREAS:
  - 20% PERENNIAL RYEGRASS MIXTURE (LOLIUM PERENNE), [A COMBINATION OF IMPROVED CERTIFIED VARIETIES WITH NO ONE VARIETY EXCEEDING 50% OF THE TOTAL, 98% PURITY, 90% GERMINATION, APPLIED AT 20 LBS/ACRE]
  - 30% PENNLAWN RED FESCUE [98% PURITY, 85% GERMINATION, APPLIED AT 30 LBS/ACRE]
  - 50% KENTUCKY BLUEGRASS MIXTURE (POA PRATENSIS), [A MIXTURE OF IMPROVED CERTIFIED VARIETIES WITH NO ONE VARIETY EXCEEDING 25% OF THE TOTAL, 98% PURITY, 80% GERMINATION, APPLIED AT 55 LBS/ACRE.] OR APPROVED EQUIVALENT.
- FULL SUN NON-MOWED MEADOW AREAS:
  - ERNST CONSERVATION SEEDS EASTERN ECOTYPE NATIVE GRASS MIX ERNMX-177 [98% PURITY, 85% GERMINATION, APPLIED AT 35-40 LBS/ACRE OR 1LB PER 1000 SQ. FT.] OR APPROVED EQUIVALENT.

SPECIES	COMMON NAME
Hordeum vulgare	BARLEY
Andropogon gerardii, Niagara	NIAGARA BIG BLUESTEM
Sorghastrum nutans, PA Ecotype	INDIAN GRASS, PA ECOTYPE
Schizachyrium scoparius, PA Ecotype	LITTLE BLUESTEM, PA ECOTYPE
Panicum virgatum, Shelter	SHELTER SWITCH GRASS

- PARTIALLY SHADED NON-MOWED AREAS:
  - ERNST CONSERVATION SEEDS PARTIALLY SHADED AREA ROADSIDE MIX ERNMX-140 [98% PURITY, 85% GERMINATION, APPLIED AT 15 LBS/ACRE OR 1/3 - 1/2 LB PER 1000 SQ. FT.] OR APPROVED EQUIVALENT.

SPECIES	COMMON NAME
Elymus hystrix	BOTTLEBRUSH GRASS
Elymus virginicus	VIRGINIA WILD RYE
Schizachyrium scoparium, PA Ecotype	LITTLE BLUESTEM, PA ECOTYPE
Chamaecrista fasciculata	PARTRIDGE PEA
Heliopsis helianthoides	OX EYE SUNFLOWER/FALSE
Hypericum pyramidatum	GREAT ST. JOHN'S WORT
Monarda fistulosa	WILD BERGAMOT
Panicum clandestinum	TIOGA DEER TONGUE
Penstemon laevigatus, PA ecotype	APPALACHIAN BEARD TONGUE, PA ECOTYPE
Zizia aurea	GOLDEN ALEXANDERS
Penstemon digitalis	TALL WHITE BEARD TONGUE
Desmodium canadense	SHOWY TICK TREFOIL
Agrostis perennans	AUTUMN BENTGRASS
Anemone virginiana	THIMBLEWEED
Cimicifuga racemosa	BLACK COHOSH
Vernonia noveboracensis	NEW YORK IRONWEED

c) STRAW MULCH OR HAY MULCH AT THE RATE OF 3.0 TONS/ACRE SHOULD BE APPLIED IN CONJUNCTION WITH ALL TEMPORARY AND PERMANENT SEEDING ACTIVITIES. MULCH SHALL BE APPLIED IMMEDIATELY AFTER SEEDING. MULCH WITH MULCH CONTROL NETTING OR EROSION CONTROL BLANKETS MUST BE INSTALLED ON ALL SLOPES 3:1 OR STEEPER. STRAW MULCH SHALL BE APPLIED IN LONG STRANDS, NOT CHOPPED OR FINELY BROKEN. IF THE MUNICIPALITY PERMITS, HYDRO-SEEDING MAY BE USED IN LIEU OF MULCHING.

d) APPLY STABILIZATION TO ALL SEEDED AREAS.

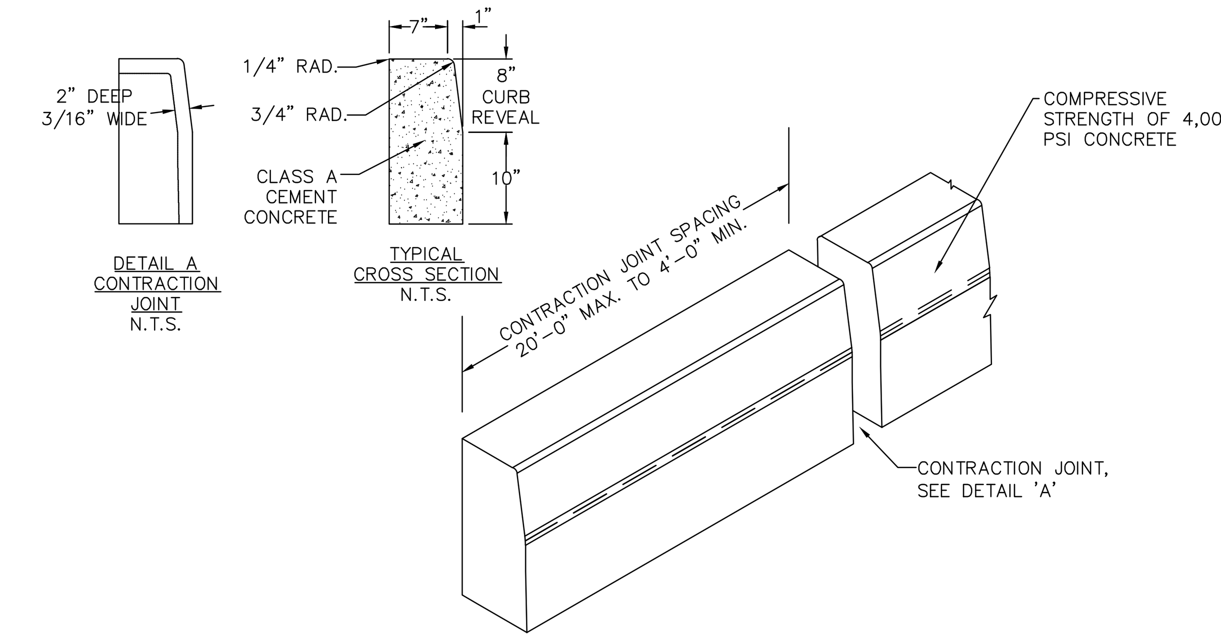

PLAIN CEMENT CONCRETE CURB

N.T.S.

1. MATERIALS AND CONSTRUCTION SHALL MEET THE REQUIREMENTS OF PUBLICATION 408, SECTION 630 AND 640 FOR PLAIN CEMENT CONCRETE CURB.
2. SPACE CONTRACTION JOINTS IN UNIFORM LENGTHS OR SECTIONS.
3. PLACE 3/4" PREMOLDED EXPANSION JOINT FILLER MATERIAL AT STRUCTURES AND AT THE END OF THE WORK DAY. CUT MATERIAL TO CONFROM TO AREA ADJACENT TO CURB OR TO CONFORM TO CROSS SECTIONAL AREA OF CURB.
4. SEE SECTION 26-411 OF THE AMITY TOWNSHIP CODE FOR SPECIFICATIONS AND MORE INFORMATION.

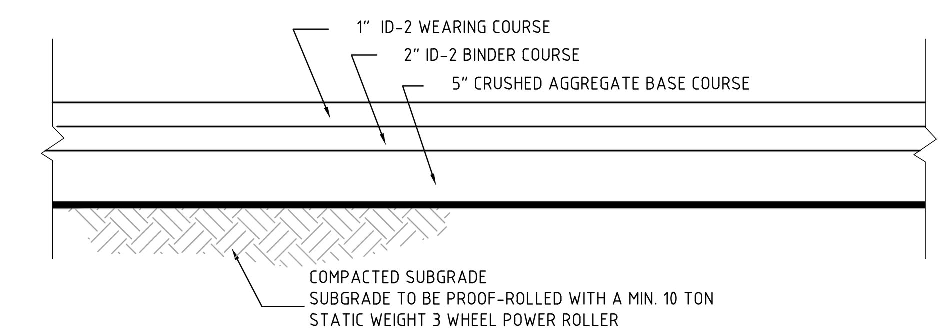

DRIVEWAY PAVEMENT SECTION DETAIL

NTS

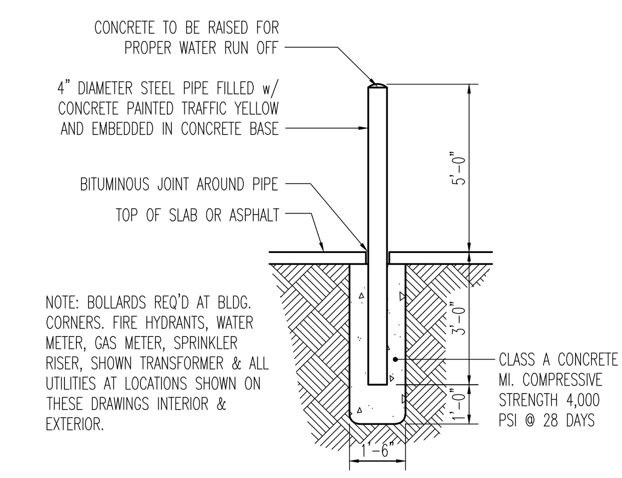

BOLLARD DETAIL

N.T.S

Dial 8-1-1 or 1-800-242-1776 not less than 3 business days nor more than 10 business days prior to the start of excavation.

Coordinate your projects via Coordinate PA at www.paonecall.org.

Pennsylvania One Call System Serial Number
20252722310

REV	DATE	DESCRIPTION	BY

SEAL: COMMONWEALTH OF PENNSYLVANIA REGISTERED PROFESSIONAL ENGINEER JOSHUA A. CASTILLO PE-080061

PROJECT: CAPTAIN CARWASH NORRISTOWN, PA 19403
WORCESTER TOWNSHIP MONTGOMERY COUNTY PENNSYLVANIA

PREPARED FOR: TOM DEPAUL CAPTAIN CARWASH 3008 W. GERMANTOWN PIKE NORRISTOWN, PA 19403

PLAN TITLE: PRELIMINARY LAND DEVELOPMENT PLAN

SHEET TITLE: DETAILS AND NOTES

PREPARED BY: WILKINSON DESIGN GROUP, LLC
374 CIRCLE OF PROGRESS DRIVE
POTTSTOWN, PA 19464 / 610-323-3400

DESIGNED	PROJECT #
MAL	2025-575
CHECKED (PM)	
JAC	
DATE	SHEET #
09-02-2025	4 OF 4
SCALE	
########	

J:\PROJECTS\2025\2025575 Captain Car Wash\CAD\2025575-LD SET.dwg

Worcester Township
Board of Supervisors
Business Meeting Minutes
December 17, 2025

The Worcester Township Board of Supervisors held a business meeting on Wednesday, December 17, 2025, at the Worcester Township Municipal Building.

Call to Order
The meeting was called to order at approximately 7:00 PM by Chairman Rick DeLello, followed by the Pledge of Allegiance.

Roll Call
Supervisors present were Chairman Rick DeLello, Vice Chairman Lou Betz, and Supervisor Steve Quigley.

Also present were Township Solicitor Wendy McKenna, Township Engineer John Evarts, Assistant Township Manager Christian Jones, and Township Manager Dan DeMeno.

Assistant Township Manager Christian Jones advised that the meeting was being recorded.

Chairman's Remarks
Chairman DeLello provided remarks recognizing Supervisor Steve Quigley for his 18 years of service on the Board of Supervisors. He highlighted Supervisor Quigley's leadership in open space preservation, fiscal stewardship, transparency, and civility in public meetings, noting that no tax increases occurred during his tenure and acknowledging his service on the County Farm Board. Supervisor Quigley offered brief remarks thanking the Board and residents.

Public Comment
Chairman DeLello opened the public comment period.

Jim Mollick, Worcester Township, commented in appreciation of Supervisor Quigley's service and reflected on improvements in public participation and transparency at Township meetings over the years.

With no additional public comment, the public comment period was closed.

Consent Agenda
Chairman DeLello asked if any items should be removed from the consent agenda. None were requested.

Motion was made by Supervisor Betz, seconded by Supervisor Quigley, to approve the consent agenda, including the November 19, 2025 Board of Supervisors Business Meeting Minutes, the Treasurer's Report, other monthly reports for November 2025, and payment of bills for November 2025 in the amount of $338,257.96. Motion carried unanimously.

Motion to Approve the 2026 Worcester Township Budget
Chairman DeLello reviewed the budget process, noting presentations in September and October and advertisement of the proposed budget following Board authorization. Township Manager DeMeno confirmed that the budget was properly advertised in the Times Herald and made available for public inspection, and that no public comments were received during the advertised comment period.

Motion was made by Supervisor Betz, seconded by Supervisor Quigley, to approve the 2026 Worcester Township Budget. Motion carried unanimously.

Motion to Authorize Agreement with Farmers Union for Storage at Fisher Road Barn
Township Manager DeMeno reported that he met with representatives of the Farmers Union regarding storage use at the Fisher Road Barn and prepared an agreement that was reviewed and approved by the Township Solicitor. The agreement was intended to protect the Township while allowing community use of the space.

Motion was made by Supervisor Betz, seconded by Supervisor Quigley, to authorize the agreement with the Farmers Union for storage at the Fisher Road Barn.

Bill McGrane, President of the Farmers Union Company, provided public comment thanking the Township and confirming the organization's support of the agreement.

With no further public comment, the motion carried unanimously.

Other Business
Chairman DeLello asked if there was any other business to come before the Board. None was presented.

Additional Public Comment
Ed Moore commented regarding the status of the Palmer land use appeal. Township Solicitor Wendy McKenna provided a public update on procedural matters, including party status stipulations, briefing schedules, and oral argument scheduled for March 3, 2026.

Bob Andorn raised questions regarding a computer expense reflected in the November financial report and requested clarification. Staff indicated the information would be provided following the meeting.

Mr. Andorn also inquired about snow removal practices on paved walking paths in Township parks. Board members, Township Manager DeMeno, and Solicitor McKenna discussed historical practices, liability considerations, and potential policy review. Township Manager DeMeno stated he would consult with the Public Works Director and neighboring municipalities and report back to the Board.

Jim Mollick provided additional public comment regarding transparency, litigation costs, park maintenance liability, and Township finances, including earned income tax revenues and capital reserves.

No further public comment was offered.

Adjournment
With no further business, the meeting was adjourned at approximately 7:45 PM.

Respectfully Submitted,

_____

Dan DeMeno
Worcester Township Manager/Secretary

WORCESTER TOWNSHIP BOARD OF SUPERVISORS
REORGANIZATION MEETING MINUTES
January 5, 2026

The Worcester Township Board of Supervisors held its Reorganization Meeting on Monday, January 5, 2026 at 7:00 PM, at the Worcester Township Building. Chairman Rick DeLello called the meeting to order and welcomed those in attendance.

Pledge of Allegiance
The Pledge of Allegiance was recited.

Roll Call
Supervisors Present:
- Rick DeLello, Chair
- Lou Betz, Vice Chair
- Christine Steere

Also Present:
- Dan DeMeno, Township Manager
- Wendy McKenna, Brant & Associates

Public Comment
No public comment was offered.

Appointment of Temporary Chair
Motion was made by Christine Steere, seconded by Lou Betz, to appoint Lou Betz as Temporary Chair of the Board. Motion carried unanimously.

Appointment of Temporary Secretary
Motion was made by Rick DeLello, seconded by Christine Steere, to appoint Dan DeMeno as Temporary Secretary. Motion carried unanimously.

Election of Chairman
Motion was made by Christine Steere, seconded by Lou Betz, to appoint Lou Betz as Chair of the Board of Supervisors. Motion carried unanimously.

Election of Vice Chair
Motion was made by Lou Betz, seconded by Christine Steere, to appoint Christine Steere as Vice Chair of the Board of Supervisors. Motion carried unanimously.

Official Appointments (Items A–W)
Motion was made by Rick DeLello, seconded by Lou Betz, to approve official Township appointments including Township Manager, Assistant Township Manager, Finance Director, Secretary, Treasurer, Zoning Officer, Code Enforcement Officers, Emergency Management Coordinator, Fire Marshal, Building Code Official, PSATS Delegates, and related positions as presented. Motion carried unanimously.

PSATS Convention Voting Delegate
Motion was made by Rick DeLello, seconded by Lou Betz, to designate the Chair of the Board as the PSATS Convention Voting Delegate. Motion carried unanimously.

Official Appointments (Items Y–BB)
Motion was made by Rick DeLello, seconded by Christine Steere, to approve the delegate, alternate delegates, and Deputy Tax Collector appointments as presented. Motion carried unanimously.

Professional Service Appointments
Motion was made by Rick DeLello, seconded by Lou Betz, to reappoint Township professional service providers including Township Engineer (CKS), Traffic Engineer (Bowman), Environmental Engineer (Earth Engineering), Open Space Consultant (Natural Lands), and Township Solicitor (Brandt Associates), with the understanding that requests for proposals will be issued and reviewed during 2026. Motion carried unanimously.

Volunteer and Board Appointments
Vacancy Board Chair: Motion was made by Rick DeLello, seconded by Christine Steere, to appoint Burt Hynes as Vacancy Board Chair for a one-year term. Motion carried unanimously.
Zoning Hearing Board: Motion was made by Rick DeLello, seconded by Christine Steere, to reappoint Caesar Gambone to a three-year term on the Zoning Hearing Board. Motion carried unanimously.
Planning Commission: Motion was made by Rick DeLello, seconded by Christine Steere, to reappoint Michelle Greenawalt to the Planning Commission. Motion carried unanimously. Staff was directed to prepare a resolution for consideration at a future meeting to appoint Bill McGrane as an alternate Planning Commission member.

Holiday and Meeting Schedules
Motion was made by Rick DeLello, seconded by Christine Steere, to approve the 2026 holiday and meeting schedules, subject to administrative correction of dates. Motion carried unanimously.
The Board confirmed that all Board of Supervisors meetings in 2026 will begin at 6:30 p.m., with work sessions, when scheduled, beginning at 6:30 p.m. and transitioning into the business meeting.

Township Establishments
Motion was made by Rick DeLello, seconded by Christine Steere, to approve the Township depositories, Treasurer and Assistant Treasurer bond amounts, IRS mileage reimbursement rate, and designation of the Times Herald as the Newspaper of Record. Motion carried unanimously.

Resolution 2026-01 – Fire Department Activities
Motion was made by Rick DeLello, seconded by Christine Steere, to adopt Resolution 2026-01 authorizing certain recurring activities conducted by the Worcester Township Volunteer Fire Department. Motion carried unanimously.

Resolution 2026-02 – Fee Schedule
Following public comment and discussion, no motion was made to adopt the resolution. Accordingly, the fee schedule remained unchanged from 2025.

Public Comment:
Bob Andorn commented that, based on his review of the materials, the proposed 2026 fee schedule appeared to differ from the 2025 schedule, particularly with respect to field rental fees, and could result in substantial increases. He requested clarification and recommended that, if fee changes were being contemplated, the Board allow additional time for affected organizations to review and comment.

Staff Response:
The Township Manager stated that no fee increases were being adopted at that time and that, absent Board action, the existing 2025 fee schedule would remain in effect.

Resolution 2026-03 – Appointment of Township Auditor
Motion was made by Rick DeLello, seconded by Christine Steere, to adopt Resolution 2026-03 appointing B. Bergdahl & Company as Township Auditor. Motion carried unanimously.

Resolution 2026-04 – Destruction of Public Records
Motion was made by Rick DeLello, seconded by Christine Steere, to adopt Resolution 2026-04 authorizing the destruction of certain public records in accordance with the Municipal Records Act (Act 428 of 1968). Motion carried unanimously.

Resolution 2026-05 – Emergency Service Response Areas
Motion was made by Rick DeLello, seconded by Christine Steere, to adopt Resolution 2026-05 establishing emergency service response areas as presented, with no changes from the prior year. Motion passed unanimously.

Public Comment:
Bill McGrane commented that the resolution references EMS coverage maps that were not provided at the meeting and questioned whether Board members had reviewed the maps prior to approval. He also

noted that one of the listed EMS providers, VMSC of Lansdale, does not list Worcester Township among its stated service areas on its website, despite appearing on the Township's EMS maps, and requested that this discrepancy be reviewed.

Staff Response:
The Township Manager responded that VMSC of Lansdale does actively respond to calls within Worcester Township and clarified that the EMS coverage maps have been publicly available on the Township website.

Other Business
There was no additional business.

Adjournment
Motion was made by Rick DeLello, seconded by Christine Steere, to adjourn the meeting. Motion carried unanimously. The meeting was adjourned at approximately 7:37 p.m.

Range of Checking Accts: First to Last Range of Check Dates: 12/12/25 to 01/16/26
Report Type: All Checks Report Format: Super Condensed Check Type: Computer: Y Manual: Y Dir Deposit: Y

Check #	Check Date	Vendor		Amount Paid	Reconciled/Void	Ref Num	
CAPITAL RESERVE		CAPITAL FUND					
804	12/18/25	ARROC005	ARRO CONSULTING, INC.	13,096.00	12/31/25	854	
805	12/18/25	HEIDE005	HEIDELBERG MATERIALS, LLC	508,190.02		854	
806	12/18/25	PENNS020	PENN'S TRAIL ENVIRONMENTAL,LLC	9,625.00	12/31/25	854	
807	12/18/25	ULINE005	ULINE	5,915.62		854	
808	01/08/26	TRACT005	TRACTOR SUPPLY CREDIT PLAN	6,687.96		858	

Checking Account Totals	Paid	Void	Amount Paid	Amount Void
Checks:	5	0	543,514.60	0.00
Direct Deposit:	0	0	0.00	0.00
Total:	5	0	543,514.60	0.00

Check #	Check Date	Vendor		Amount Paid	Reconciled/Void	Ref Num	
GENERAL FUND		GENERAL FUND					
37359	12/18/25	21STC005	21ST CENTRY MEDIA	684.56	12/31/25	852	
37360	12/18/25	AMERI005	AMERICAN FUELS, LLC.	3,192.40	12/31/25	852	
37361	12/18/25	APMM0005	APMM	165.00		852	
37362	12/18/25	AQUAP005	AQUA PENNSYLVANIA, INC.	7.59		852	
37363	12/18/25	ARMOU005	ARMOUR & SONS ELECTRIC INC	616.30	12/31/25	852	
37364	12/18/25	ARROC005	ARRO CONSULTING, INC.	14,775.52	12/31/25	852	
37365	12/18/25	BARRY005	BARRY ISETT & ASSOCIATES INC	15,340.00	12/31/25	852	
37366	12/18/25	BRANT005	BRANT & ASSOCIATES, LLC	14,283.50	12/31/25	852	
37367	12/18/25	CARDM005	CARDMEMBER SERVICES	4,253.82		852	
37368	12/18/25	COMCA005	COMCAST	199.57		852	
37369	12/18/25	DAVIS005	DAVIS HEATING & COOLING	398.00	12/31/25	852	
37370	12/18/25	DHULS005	D'HULSTER, ROBERT	650.00		852	
37371	12/18/25	DONER005	DONE RITE BUILDING SERV, INC.	1,249.00		852	
37372	12/18/25	FRAN0010	FRANK JONES TROPHIES	255.54		852	
37373	12/18/25	FRASE005	FRASER ADVANCED INFO SYSTEMS	609.21	12/31/25	852	
37374	12/18/25	FUREY005	FUREY & BALDASSARI, P.C.	1,400.00		852	
37375	12/18/25	GENER005	GENERAL CODE, LLC	155.00	12/31/25	852	
37376	12/18/25	HOISI005	HOISINGTON, JUSTIN	375.00		852	
37377	12/18/25	HOMED005	HOME DEPOT CREDIT SERVICES	904.76		852	
37378	12/18/25	INTER030	INTERMIX IT	3,535.13	12/31/25	852	
37379	12/18/25	KENCO005	KENCO HYDRAULICS INC	92.73	12/31/25	852	
37380	12/18/25	LITTL005	LITTLE, ROBERT E, INC	254.92	12/31/25	852	
37381	12/18/25	MCMAH010	MCMAHON A BOWMAN COMPANY	2,401.25	01/08/26 VOID	852	(Reason: pos pay issue)
37382	12/18/25	MGLPR005	MGL PRINTING SOLUTIONS	95.50	12/31/25	852	
37383	12/18/25	MILLE015	MILLER, JESSE	375.00	12/31/25	852	
37384	12/18/25	MORAN005	MORAN, MARC	375.00	12/31/25	852	
37385	12/18/25	MORTO005	MORTON SALT, INC.	8,554.28		852	
37386	12/18/25	MOSES005	MOSES, AARON	650.00		852	
37387	12/18/25	NYCES005	NYCE SHIRT COMPANY	80.25		852	
37388	12/18/25	ORRJO005	ORR, JOHN	650.00	12/31/25	852	
37389	12/18/25	PECOE005	PECO ENERGY	471.72		852	
37390	12/18/25	PENN0010	PENNSYLVANIA ONE CALL SYSTEM	57.67	12/31/25	852	
37391	12/18/25	PENNV005	PENN VALLEY GAS, INC.	989.98	12/31/25	852	
37392	12/18/25	PERK0010	PERKIOMEN PERFORMANCE, INC.	893.90	12/31/25	852	
37393	12/18/25	PROFE005	PROFESSIONAL PLUS SERVICES,INC	1,300.00	12/31/25	852	
37394	12/18/25	PSAB0005	PSAB-MRT	1,391.26	12/31/25	852	
37395	12/18/25	SYKES005	SYKES, PETER	650.00		852	

Check #	Check Date	Vendor		Amount Paid	Reconciled/Void	Ref Num	
GENERAL FUND		GENERAL FUND	Continued				
37396	12/18/25	SYNAT005	SYNATEK	1,173.00	01/08/26 VOID	852	(Reason: pos pay issue)
37397	12/18/25	TOWNS005	TOWNSHIP OF WORCESTER-PAYROLL	110,000.00	12/31/25	852	
37398	12/18/25	TPTRA010	TP TRAILER INC.	8.52	12/31/25	852	
37399	12/18/25	TRAIS005	TRAISR, LLC	1,600.00		852	
37400	12/18/25	USMUN005	US MUNICIPAL SUPPLY, INC.	4,061.95	12/31/25	852	
37401	12/18/25	VERI0010	VERIZON	49.77	12/31/25	852	
37402	12/18/25	WBMAS005	W. B. MASON CO., INC.	267.88	01/08/26 VOID	852	(Reason: pos pay issue)
37403	12/18/25	WELDO005	NAPA AUTO PARTS	433.78	12/31/25	852	
37404	01/08/26	ADVAN005	WM CORPORATE SERVICES INC.	465.85		856	
37405	01/08/26	AMERI005	AMERICAN FUELS, LLC.	392.81		856	
37406	01/08/26	CINTA005	CINTAS	98.93		856	
37407	01/08/26	COMCA005	COMCAST	644.74		856	
37408	01/08/26	FRASE010	FRASER	194.70		856	
37409	01/08/26	HOMED005	HOME DEPOT CREDIT SERVICES	1,052.66		856	
37410	01/08/26	JONES010	JONES, CHRISTIAN	18.90		856	
37411	01/08/26	MCMAH010	MCMAHON A BOWMAN COMPANY	2,401.25		856	
37412	01/08/26	METRO005	METROPOLITAN LIFE INSURANCE CO	913.46		856	
37413	01/08/26	MILLE015	MILLER, JESSE	150.00		856	
37414	01/08/26	NORTH005	NORTH PENN WATER AUTHORITY	99.82		856	
37415	01/08/26	PANZU005	QUAGLIARIELLO, NICOLE	71.40		856	
37416	01/08/26	PAWC0005	PAWC	1,208.19		856	
37417	01/08/26	PECOE005	PECO ENERGY	2,343.18		856	
37418	01/08/26	PENNV005	PENN VALLEY GAS, INC.	1,252.13		856	
37419	01/08/26	PITN0010	PITNEY BOWES, INC.	267.00		856	
37420	01/08/26	PROTE005	EVERON	508.29		856	
37421	01/08/26	PSAB0005	PSAB-MRT	1,391.26		856	
37422	01/08/26	RICHT005	RICHTER TOTAL OFFICE	75.00		856	
37423	01/08/26	RINGC005	RINGCENTRAL INC.	184.58		856	
37424	01/08/26	SYNAT005	SYNATEK	1,173.00		856	
37425	01/08/26	TRAIS005	TRAISR, LLC	1,600.00		856	
37426	01/08/26	VERIZ005	VERIZON WIRELESS	109.16		856	
37427	01/08/26	WBMAS005	W. B. MASON CO., INC.	224.71		856	
37428	01/08/26	WEXBA005	WEX BANK	2,882.59		856	

Checking Account Totals	Paid	Void	Amount Paid	Amount Void
Checks:	67	3	215,809.74	3,842.13
Direct Deposit:	0	0	0.00	0.00
Total:	67	3	215,809.74	3,842.13

STATE FUND		STATE FUND					
1261	12/18/25	HEIDE005	HEIDELBERG MATERIALS, LLC	357,000.00		855	

Checking Account Totals	Paid	Void	Amount Paid	Amount Void
Checks:	1	0	357,000.00	0.00
Direct Deposit:	0	0	0.00	0.00
Total:	1	0	357,000.00	0.00

WASTE WATER FUN		WASTE WATER FUND					
5177	12/18/25	AMER0015	AMERICAN WATER	15.00	12/31/25	853	
5178	12/18/25	ARROC005	ARRO CONSULTING, INC.	399.75	12/31/25	853	
5179	12/18/25	BELLW005	BELLWOAR KELLY, LLP	102.00	12/31/25	853	
5180	12/18/25	FLOWA005	FLOW ASSESSMENT SERVICES LLC	965.00	12/31/25	853	
5181	12/18/25	MJREI005	MJ REIDER ASSOCIATES, INC.	1,047.00		853	

Check #	Check Date	Vendor		Amount Paid	Reconciled/Void	Ref Num
WASTE WATER FUN		WASTE WATER FUND	Continued			
5182	12/18/25	POST0010	POSTMASTER	700.69		853
5183	12/18/25	RMEQU005	R&M EQUIPMENT COMPANY	5,608.00	12/31/25	853
5184	12/18/25	UNIVA005	UNIVAR USA, INC.	2,527.26	12/31/25	853
5185	12/18/25	USABL005	USA BLUE BOOK	2,979.94	12/31/25	853
5186	12/18/25	VERI0010	VERIZON	234.42	12/31/25	853
5187	12/18/25	WINDR005	WIND RIVER ENVIRONMENT LLC	4,366.00	12/31/25	853
5188	01/08/26	BELLW005	BELLWOAR KELLY, LLP	76.50		857
5189	01/08/26	GENER015	GENERATOR GUY INC.	952.00		857
5190	01/08/26	MEADO005	MEADOWOOD SENIOR LIVING	321.72		857
5191	01/08/26	PECOE005	PECO ENERGY	12,659.37		857
5192	01/08/26	UNIVA005	UNIVAR USA, INC.	8,054.22		857
5193	01/08/26	VERI0010	VERIZON	184.85		857

Checking Account Totals	Paid	Void	Amount Paid	Amount Void
Checks:	17	0	41,193.72	0.00
Direct Deposit:	0	0	0.00	0.00
Total:	17	0	41,193.72	0.00

Report Totals	Paid	Void	Amount Paid	Amount Void
Checks:	90	3	1,157,518.06	3,842.13
Direct Deposit:	0	0	0.00	0.00
Total:	90	3	1,157,518.06	3,842.13

Totals by Year-Fund Fund Description	Fund	Expend Total	Revenue Total	G/L Total	Total
	5-001	92,373.09	0.00	110,000.00	202,373.09
	5-008	40,150.03	0.00	0.00	40,150.03
	5-030	543,514.60	0.00	0.00	543,514.60
	5-035	357,000.00	0.00	0.00	357,000.00
Year Total:		1,033,037.72	0.00	110,000.00	1,143,037.72
	6-001	2,885.82	0.00	0.00	2,885.82
	6-008	1,043.69	0.00	0.00	1,043.69
Year Total:		3,929.51	0.00	0.00	3,929.51
Total Of All Funds:		1,036,967.23	0.00	110,000.00	1,146,967.23

Totals by Fund Fund Description	Fund	Expend Total	Revenue Total	G/L Total	Total
	001	95,258.91	0.00	110,000.00	205,258.91
	008	41,193.72	0.00	0.00	41,193.72
	030	543,514.60	0.00	0.00	543,514.60
	035	357,000.00	0.00	0.00	357,000.00
Total Of All Funds:		1,036,967.23	0.00	110,000.00	1,146,967.23

Fund Description	Fund	Current	Prior Rcvd	Prior Open	Paid Prior	Fund Total
	5-001	92,373.09	0.00	0.00	0.00	92,373.09
	5-008	40,150.03	0.00	0.00	0.00	40,150.03
	5-030	543,514.60	0.00	0.00	0.00	543,514.60
	5-035	357,000.00	0.00	0.00	0.00	357,000.00
Year Total:		1,033,037.72	0.00	0.00	0.00	1,033,037.72
	6-001	2,885.82	0.00	0.00	0.00	2,885.82
	6-008	1,043.69	0.00	0.00	0.00	1,043.69
Year Total:		3,929.51	0.00	0.00	0.00	3,929.51
Total Of All Funds:		1,036,967.23	0.00	0.00	0.00	1,036,967.23

Project Description	Project No.	Project Total
3205 SKIPPACK- LGL/ENG	145-0260	733.50
RESERVE AT CENTER SQ-LGL/ENG	145-0299	2,894.37
MILL/PERNA-GUNSALAS- LGL/ENG	145-0328	401.00
BET INVESTMENT/DUBNER-LGL/ENG	145-0345	298.00
HUGANIR-ARDEN RESERVE-LGL/ENG	145-0350	504.70
2044 BERKS RD-LGL/ENG	145-0362	485.20
BELLFLOWER-LGL/ENG	145-0364	1,167.40
WESTRUM-TROOPER RD-LGL/ENG	145-0368	294.75
METHACTON HIGH SCHOOL-LGL/ENG	145-0373	693.00
ZHB APP VOLPE	145-0374	240.33
1551/1555 KRIEBEL MILL-LGL/ENG	145-0379	506.75
PAWC TOWNSHIP LN PUMP-LGL/ENG	145-0381	23.75
BARN BERKS/ALLAN MYERS-LGL/ENG	145-0383	63.00
1038 WINDY HILL-ARDEN-LGL/ENG	145-0398	158.00
1501 N WALES-LGL/ENG	145-0399	298.00
2045 BETHEL RD-LGL/ENG	145-0407	172.75
1616 WHITEHALL-LGL/ENG	145-0408	23.75
3268 BARLEY LN- LGL/ENG	145-0412	568.00
1636 BERKS RD-LGL/ENG	145-0413	784.25
ZHB APP GSS VENTURES	145-0416	240.33
Total Of All Projects:		10,550.83

TOWNSHIP OF WORCESTER

Statement of Revenue and Expenditures - Standard

01/16/2026
10:46 AM

Revenue Account Range: *First to zzz-zzz-zzz-zzz*
Expend Account Range: *First to zzz-zzz-zzz-zzz*
Print Zero YTD Activity: *No*

Include Non-Anticipated: *Yes*
Include Non-Budget: *No*

Year To Date As Of: *12/31/25*
Current Period: *12/01/25 to 12/31/25*
Prior Year: *Thru 12/31/24*

Revenue Account	*Description*	*Prior Yr Rev*	*Anticipated*	*Curr Rev*	*YTD Rev*	*Excess/Deficit*	*% Real*
001-301-100-000	Property Taxes- Current	51,318.11	49,290.00	64.97	51,865.62	2,575.62	105
001-301-500-000	Property Taxes- Liened	726.55	510.00	24.64	439.11	70.89 -	86
001-301-600-000	Property Taxes- Interim	265.71	200.00	27.03	212.44	12.44	106
	301 Total	**52,310.37**	**50,000.00**	**116.64**	**52,517.17**	**2,517.17**	**105**
001-310-030-000	Per Capita Taxes- Delinquent	78.10	100.00	1.10	36.30	63.70 -	36
001-310-100-000	Real Estate Transfer Taxes	501,088.81	250,000.00	20,090.00	550,485.23	300,485.23	220
001-310-210-000	Earned Income Taxes	3,734,313.06	3,586,000.00	115,113.31	2,982,619.73	603,380.27 -	83
001-310-220-000	Earned Income Taxes- Prior Year	0.00	15.00	0.00	0.00	15.00 -	0
	310 Total	**4,235,479.97**	**3,836,115.00**	**135,204.41**	**3,533,141.26**	**302,973.74 -**	**92**
001-321-800-000	Franchise Fees	203,805.99	196,000.00	0.00	151,597.70	44,402.30 -	77
001-322-820-000	Road Opening Permits	424.00	300.00	0.00	318.00	18.00	106
001-322-900-000	Sign Permits	28.00	100.00	0.00	56.00	44.00 -	56
001-322-920-000	Solicitation Permits	588.00	500.00	28.00	896.00	396.00	179
	322 Total	**1,040.00**	**900.00**	**28.00**	**1,270.00**	**370.00**	**141**
001-331-120-000	Ordinance Violations	6,117.88	1,600.00	636.61	2,975.54	1,375.54	186
001-341-000-000	Interest Earnings	18,440.44	5,000.00	2,016.60	16,932.91	11,932.91	339
001-342-000-000	Rents & Royalties	20,894.21	21,794.87	1,826.35	23,322.77	1,527.90	107
001-342-120-000	Cell Tower Rental	119,240.45	159,900.00	15,797.20	187,658.62	27,758.62	117
	342 Rents & Royalties	**140,134.66**	**181,694.87**	**17,623.55**	**210,981.39**	**29,286.52**	**116**

TOWNSHIP OF WORCESTER

Statement of Revenue and Expenditures

01/16/2026
10:46 AM

Revenue Account	Description	Prior Yr Rev	Anticipated	Curr Rev	YTD Rev	Excess/Deficit	% Real
001-354-120-000	Emergencey Relief- PEMA	6,116.47	0.00	0.00	0.00	0.00	0
001-355-010-000	Public Utility Realty Tax	3,453.57	3,453.57	0.00	3,876.59	423.02	112
001-355-040-000	Alcohol License Fees	600.00	600.00	0.00	600.00	0.00	100
001-355-050-000	General Municipal Pension State Aid	88,081.77	88,081.77	0.00	79,988.02	8,093.75 -	91
001-355-070-000	Volunteer Fire Relief Association	105,949.04	105,949.04	0.00	113,391.11	7,442.07	107
	355 Total	**198,084.38**	**198,084.38**	**0.00**	**197,855.72**	**228.66 -**	**99**
001-361-300-000	Land Development Fees	6,000.00	4,000.00	0.00	32,083.50	28,083.50	802
001-361-330-000	Conditional Use Fees	0.00	1,500.00	0.00	0.00	1,500.00 -	0
001-361-340-000	Zoning Hearing Board Fees	24,075.00	16,625.00	0.00	13,000.00	3,625.00 -	78
001-361-500-000	Map And Publication Sales	66.25	5.00	0.00	0.00	5.00 -	0
	361 Total	**30,141.25**	**22,130.00**	**0.00**	**45,083.50**	**22,953.50**	**203**
001-362-410-000	Building Permit Fees	138,816.21	80,000.00	22,760.15	126,886.06	46,886.06	159
001-362-420-000	Zoning Permit Fees	29,525.00	20,500.00	3,957.00	29,606.00	9,106.00	144
001-362-450-000	Commercial U&O Fees	600.00	200.00	0.00	500.00	300.00	250
001-362-460-000	Driveway Permit Fees	1,148.00	600.00	0.00	784.00	184.00	131
	362 Total	**170,089.21**	**101,300.00**	**26,717.15**	**157,776.06**	**56,476.06**	**155**
001-367-408-000	Sports & Lesson Fees	1,715.00	1,800.00	0.00	0.00	1,800.00 -	0
001-367-420-000	Park Miscellaneous	17,785.00	14,200.00	0.00	27,363.00	13,163.00	193
	367 Total	**19,500.00**	**16,000.00**	**0.00**	**27,363.00**	**11,363.00**	**171**
001-381-000-000	Miscellaneous Income	621.37	1,000.00	0.00	24,163.33	23,163.33	***
001-381-001-000	Service Charge Fees	268.44	225.00	197.72	597.73	372.73	266
	381 Miscellaneous Income	**889.81**	**1,225.00**	**197.72**	**24,761.06**	**23,536.06**	***

TOWNSHIP OF WORCESTER
Statement of Revenue and Expenditures

Revenue Account	*Description*	*Prior Yr Rev*	*Anticipated*	*Curr Rev*	*YTD Rev*	*Excess/Deficit*	*% Real*
001-383-200-000	Escrow Administration	1,210.00	880.00	0.00	440.00	440.00 -	50
001-392-300-000	Transfer From Capital Fund	350,000.00	0.00	0.00	0.00	0.00	0
001-395-000-000	Refund of Prior Year Expenditures	9,220.92	0.00	0.00	6,088.23	6,088.23	0
	Fund 001 Revenue Totals	**5,442,581.35**	**4,610,929.25**	**182,540.68**	**4,428,783.54**	**182,145.71 -**	**96**

Expenditure Account	*Description*	*Prior Yr Expd*	*Budgeted*	*Current Expd*	*YTD Expended*	*Unexpended*	*% Expd*
001-400-000-000	LEGISLATIVE BODY:	0.00	0.00	0.00	0.00	0.00	0
001-400-110-000	Legislative- Payroll	7,500.00	7,500.00	570.00	7,500.00	0.00	100
001-400-150-000	Legislative- Benefits	35,574.42	47,842.26	4,105.35	49,388.52	1,546.26 -	103
001-400-312-000	Legislative- Consultant Services	37,700.00	23,500.00	0.00	24,600.00	1,100.00 -	105
001-400-337-000	Legislative- Mileage Reimbursement	353.76	420.00	0.00	369.60	50.40	88
001-400-420-000	Legislative- Dues & Subscriptions	3,613.00	4,825.00	0.00	478.00	4,347.00	10
001-400-460-000	Legislative- Meetings & Seminars	4,530.57	5,300.00	222.44	4,993.11	306.89	94
	400 LEGISLATIVE BODY:	**89,271.75**	**89,387.26**	**4,897.79**	**87,329.23**	**2,058.03**	**98**
001-401-000-000	MANAGER:	0.00	0.00	0.00	0.00	0.00	0
001-401-120-000	Management- Payroll	283,133.54	278,750.00	21,442.30	271,201.83	7,548.17	97
001-401-150-000	Management- Benefits	54,919.44	79,035.35	7,458.89	90,946.96	11,911.61 -	115
001-401-312-000	Management- Consultant Services	5,904.60	9,950.00	0.00	0.00	9,950.00	0
001-401-321-000	Management- Mobile Phone	1,291.89	1,380.00	149.24	1,276.39	103.61	92
001-401-337-000	Management- Mileage Reimbursement	8,930.96	5,580.00	450.00	5,543.36	36.64	99
001-401-460-000	Management- Meetings & Seminars	4,582.10	5,610.00	146.24 -	4,591.46	1,018.54	82
	401 MANAGER:	**358,762.53**	**380,305.35**	**29,354.19**	**373,560.00**	**6,745.35**	**98**
001-402-000-000	FINANCIAL ADMINISTRATION:	0.00	0.00	0.00	0.00	0.00	0

TOWNSHIP OF WORCESTER

Statement of Revenue and Expenditures

Expenditure Account	*Description*	*Prior Yr Expd*	*Budgeted*	*Current Expd*	*YTD Expended*	*Unexpended*	*% Expd*
001-402-120-000	Finance- Payroll	89,931.49	103,000.00	7,923.08	100,068.31	2,931.69	97
001-402-150-000	Finance- Benefits	56,484.01	54,640.36	3,113.21	55,480.32	839.96 -	102
001-402-321-000	Finance- Mobile Phone	300.00	300.00	25.00	300.00	0.00	100
001-402-337-000	Finance- Mileage Reimbursement	218.96	250.00	71.40	198.09	51.91	79
001-402-460-000	Finance- Meeting & Seminars	493.85	1,300.00	0.00	0.00	1,300.00	0
	402 FINANCIAL ADMINISTRATION:	**147,428.31**	**159,490.36**	**11,132.69**	**156,046.72**	**3,443.64**	**98**
001-403-000-000	TAX COLLECTION:	0.00	0.00	0.00	0.00	0.00	0
001-403-110-000	Tax Collection- Payroll	2,644.53	2,500.00	0.00	2,604.75	104.75 -	104
001-403-150-000	Tax Collection- Benefits	202.31	136.79	0.00	199.27	62.48 -	146
001-403-210-000	Tax Collection- Office Supplies	4,661.31	6,200.00	0.00	6,050.41	149.59	98
001-403-310-000	Tax Collection- Professional Services	38,882.10	39,446.17	937.19	33,339.25	6,106.92	85
	403 TAX COLLECTION:	**46,390.25**	**48,282.96**	**937.19**	**42,193.68**	**6,089.28**	**87**
001-404-000-000	LEGAL SERVICES:	0.00	0.00	0.00	0.00	0.00	0
001-404-310-000	Legal- General Services	259,715.95	183,663.50	11,122.25	186,406.84	2,743.34 -	101
001-404-320-000	Legal- RTK Services	5,672.50	12,000.00	0.00	2,961.00	9,039.00	25
	404 LEGAL SERVICES:	**265,388.45**	**195,663.50**	**11,122.25**	**189,367.84**	**6,295.66**	**97**
001-405-000-000	CLERICAL:	0.00	0.00	0.00	0.00	0.00	0
001-405-140-000	Clerical- Payroll	97,699.70	184,000.00	9,542.46	105,861.41	78,138.59	58
001-405-150-000	Clerical- Benefits	18,211.96	52,882.96	3,424.63	33,006.73	19,876.23	62
001-405-210-000	Clerical- Office Supplies	4,149.94	6,500.00	773.36	4,739.31	1,760.69	73
001-405-310-000	Payroll Services	13,010.01	13,770.00	1,250.58	16,463.27	2,693.27 -	120
001-405-321-000	Clerical- Telephone	3,216.92	4,893.00	250.58	3,640.26	1,252.74	74
001-405-325-000	Clerical- Postage	4,104.00	5,911.00	1,238.05	3,835.54	2,075.46	65
001-405-337-000	Clerical- Mileage Reimbursement	0.00	240.00	0.00	75.04	164.96	31
001-405-340-000	Clerical- Advertisement	4,227.88	6,300.00	203.90	3,390.82	2,909.18	54

TOWNSHIP OF WORCESTER
Statement of Revenue and Expenditures

Expenditure Account	Description	Prior Yr Expd	Budgeted	Current Expd	YTD Expended	Unexpended	% Expd
001-405-460-000	Clerical- Meetings & Seminars	579.94	2,540.00	198.10	2,182.67	357.33	86
001-405-465-000	Clerical- Computer Expense	83,846.01	78,082.00	12,929.08	108,894.46	30,812.46 -	139
001-405-470-000	Clerical- Other Expense	12,831.19	14,226.00	1,422.27	11,733.37	2,492.63	82
	405 CLERICAL:	**241,877.55**	**369,344.96**	**31,233.01**	**293,822.88**	**75,522.08**	**80**
001-408-000-000	ENGINEERING SERVICES:	0.00	0.00	0.00	0.00	0.00	0
001-408-310-000	Engineering Services	81,006.52	52,250.00	6,784.60	66,693.96	14,443.96 -	128
001-409-000-000	GOVERNMENT BUILDINGS & PLANT:	0.00	0.00	0.00	0.00	0.00	0
001-409-136-000	Administration- Utilities	7,982.64	12,384.00	780.59	10,375.89	2,008.11	84
001-409-137-000	Administration- Maintenance & Repairs	17,309.27	20,076.00	1,713.07	14,173.03	5,902.97	71
001-409-142-000	Administration- Alarm Service	4,282.21	4,872.00	277.33	4,605.38	266.62	95
001-409-147-000	Administration- Other Expenses	1,429.44	2,520.00	47.62	741.11	1,778.89	29
001-409-236-000	Garage- Utilities	12,779.57	15,780.00	3,980.18	13,696.12	2,083.88	87
001-409-237-000	Garage- Maintenance & Repairs	10,262.29	13,488.00	1,113.65	10,382.53	3,105.47	77
001-409-242-000	Garage- Alarm Service	2,049.64	3,060.00	179.21	2,034.42	1,025.58	66
001-409-247-000	Garage- Other Expenses	1,554.29	1,740.00	51.31	1,007.33	732.67	58
001-409-436-000	Community Hall- Utilities	4,831.03	6,900.00	738.03	5,092.39	1,807.61	74
001-409-437-000	Community Hall- Maintenance & Repairs	6,014.34	7,140.00	249.80	4,008.28	3,131.72	56
001-409-447-000	Community Hall- Other Expenses	89.51	660.00	219.00	279.62	380.38	42
001-409-536-000	Historical Bldg- Utilities	1,316.82	5,433.00	879.68	3,528.49	1,904.51	65
001-409-537-000	Historical Bldg- Maintenance & Repairs	1,758.20	2,088.00	0.00	4,044.00	1,956.00 -	194
001-409-636-000	Hollow Rd Rental- Utilities	0.00	250.00	0.00	0.00	250.00	0
001-409-637-000	Hollow Rd Rental- Maintenance & Repairs	249.00	4,248.00	0.00	1,130.50	3,117.50	27
001-409-737-000	Springhouse- Maintenance & Repairs	0.00	1,000.00	0.00	0.00	1,000.00	0
001-409-836-000	Dutchy Church- Utilities	481.46	600.00	100.37	600.51	0.51 -	100
001-409-837-000	Dutchy Church- Maitenance and Repairs	0.00	960.00	0.00	76.92	883.08	8
	409 GOVERNMENT BUILDINGS & PLANT:	**72,389.71**	**103,199.00**	**10,329.84**	**75,776.52**	**27,422.48**	**73**

TOWNSHIP OF WORCESTER

Statement of Revenue and Expenditures

Expenditure Account	Description	Prior Yr Expd	Budgeted	Current Expd	YTD Expended	Unexpended	% Expd
001-411-000-000	FIRE:	0.00	0.00	0.00	0.00	0.00	0
001-411-380-000	Fire Protection- Hydrant Rentals	26,158.64	32,671.32	2,176.09	13,265.71	19,405.61	41
001-411-540-000	Fire Protection- WVFD Contributions	470,645.04	480,379.04	0.00	487,321.11	6,942.07 -	101
	411 FIRE:	**496,803.68**	**513,050.36**	**2,176.09**	**500,586.82**	**12,463.54**	**98**
001-412-001-000	Ambulance services	0.00	0.00	0.00	53,775.00	53,775.00 -	0
001-413-000-000	UCC & CODE ENFORCEMENT:	0.00	0.00	0.00	0.00	0.00	0
001-413-110-000	Fire Marshal- Payroll	4,215.00	16,380.00	400.00	4,400.00	11,980.00	27
001-413-110-150	Fire Marshal- Benefits	2,532.72	5,694.71	0.00	0.00	5,694.71	0
001-413-150-000	Code Enforcement- Benefits	0.00	252.75	0.00	0.00	252.75	0
001-413-210-000	Code Enforcement- Supplies	3,645.00	6,505.00	155.00	8,976.50	2,471.50 -	138
001-413-312-000	Code Enforcement- Consultant Services	51,730.00	82,990.80	14,940.00	88,302.06	5,311.26 -	106
001-413-321-000	Code Enforcement- Mobile Phone	332.89	360.00	0.00	210.56	149.44	58
001-413-337-000	Code Enforcement- Mileage Reimbursement	0.00	840.00	0.00	0.00	840.00	0
001-413-460-000	Code Enforcement- Meetings & Seminars	0.00	400.00	0.00	0.00	400.00	0
	413 UCC & CODE ENFORCEMENT:	**62,455.61**	**113,423.26**	**15,495.00**	**101,889.12**	**11,534.14**	**90**
001-414-000-000	PLANNING & ZONING:	0.00	0.00	0.00	0.00	0.00	0
001-414-140-000	Zoning- Payroll	2,150.00	4,400.00	200.00	1,550.00	2,850.00	35
001-414-150-000	Zoning- Benefits	164.66	337.04	15.32	118.73	218.31	35
001-414-310-000	Zoning- Professional Services	16,313.00	13,300.00	0.00	7,582.90	5,717.10	57
001-414-313-000	Zoning- Engineering	450.12	1,500.00	0.00	0.00	1,500.00	0
001-414-314-000	Zoning- Legal	42,520.00	36,100.00	1,400.00	41,760.00	5,660.00 -	116
001-414-315-000	Zoning- Conditional Use	1,634.00	9,500.00	0.00	0.00	9,500.00	0
001-414-341-000	Zoning- Advertisement	3,757.91	2,700.00	0.00	615.67	2,084.33	23
001-414-460-000	Zoning- Meetings & Seminars	0.00	200.00	0.00	0.00	200.00	0
	414 PLANNING & ZONING:	**66,989.69**	**68,037.04**	**1,615.32**	**51,627.30**	**16,409.74**	**76**

TOWNSHIP OF WORCESTER

Statement of Revenue and Expenditures

01/16/2026
10:46 AM

Expenditure Account	Description	Prior Yr Expd	Budgeted	Current Expd	YTD Expended	Unexpended	% Expd
001-419-000-000	OTHER PUBLIC SAFETY:	0.00	0.00	0.00	0.00	0.00	0
001-419-242-000	PA One Call	1,163.95	2,580.00	57.67	1,168.00	1,412.00	45
001-430-000-000	PUBLIC WORKS - ADMIN:	0.00	0.00	0.00	0.00	0.00	0
001-430-140-000	Public Works- Payroll	539,961.45	618,878.24	45,664.61	566,482.35	52,395.89	92
001-430-150-000	Public Works- Benefits	315,951.57	326,003.65	24,325.88	337,053.85	11,050.20 -	103
001-430-238-000	Public Works- Uniforms	6,340.23	9,700.00	230.25	3,716.73	5,983.27	38
001-430-326-000	Public Works- Mobile phones	506.98	672.00	144.12	861.41	189.41 -	128
001-430-460-000	Public Works- Meetings & Seminars	410.00	1,200.00	0.00	839.24	360.76	70
001-430-470-000	Public Works- Other Expenses	2,112.24	1,715.00	0.00	1,734.95	19.95 -	101
	430 PUBLIC WORKS - ADMIN:	**865,282.47**	**958,168.89**	**70,364.86**	**910,688.53**	**47,480.36**	**95**
001-432-000-000	WINTER MAINTENANCE- SNOW REMOVAL:	0.00	0.00	0.00	0.00	0.00	0
001-432-200-000	Snow Removal- Materials	27,127.10	39,125.00	8,554.28	62,524.28	23,399.28 -	160
001-432-450-000	Snow Removal- Contractor	0.00	1,500.00	0.00	0.00	1,500.00	0
	432 WINTER MAINTENANCE- SNOW REMOVA	**27,127.10**	**40,625.00**	**8,554.28**	**62,524.28**	**21,899.28 -**	**154**
001-433-000-000	TRAFFIC CONTROL DEVICES:	0.00	0.00	0.00	0.00	0.00	0
001-433-313-000	Traffic Signal- Engineering	10,511.72	9,000.00	3,910.00	4,353.75	4,646.25	48
001-433-361-000	Traffic Signal- Electricity	4,271.43	4,740.00	201.97	4,194.42	545.58	88
001-433-374-000	Traffic Signal- Maintenance	13,607.95	11,400.00	616.30	13,275.39	1,875.39 -	116
	433 TRAFFIC CONTROL DEVICES:	**28,391.10**	**25,140.00**	**4,728.27**	**21,823.56**	**3,316.44**	**87**
001-437-000-000	REPAIRS OF TOOLS AND MACHINERY:	0.00	0.00	0.00	0.00	0.00	0
001-437-250-000	Machinery & Tools- Vehicle Maintenance	93,653.01	82,200.00	1,250.07	93,189.81	10,989.81 -	113
001-437-260-000	Machinery & Tools- Small Tools	8,622.74	16,000.00	5,467.39	9,854.52	6,145.48	62
	437 REPAIRS OF TOOLS AND MACHINERY:	**102,275.75**	**98,200.00**	**6,717.46**	**103,044.33**	**4,844.33 -**	**105**

TOWNSHIP OF WORCESTER

Statement of Revenue and Expenditures

01/16/2026
10:47 AM

Expenditure Account	Description	Prior Yr Expd	Budgeted	Current Expd	YTD Expended	Unexpended	% Expd
001-438-000-000	ROADS & BRIDGES:	0.00	0.00	0.00	0.00	0.00	0
001-438-231-000	Gasoline	6,974.41	6,000.00	2,334.97	9,075.38	3,075.38 -	151
001-438-232-000	Diesel Fuel	20,836.89	29,976.52	3,909.83	24,048.69	5,927.83	80
001-438-242-000	Road Signs	3,248.07	6,000.00	0.00	4,277.38	1,722.62	71
001-438-245-000	Road Supplies	24,830.78	56,500.00	0.00	11,075.33	45,424.67	20
001-438-313-000	Engineering	12,582.21	25,000.00	453.00	18,848.38	6,151.62	75
001-438-370-000	Road Program- Contractor	0.00	15,000.00	0.00	6,198.50	8,801.50	41
	438 ROADS & BRIDGES:	**68,472.36**	**138,476.52**	**6,697.80**	**73,523.66**	**64,952.86**	**53**
001-446-000-000	STORM WATER MANAGEMENT:	0.00	0.00	0.00	0.00	0.00	0
001-446-313-000	Stormwater Management- Engineering	18,398.45	37,000.00	1,345.00	8,428.75	28,571.25	23
001-452-000-000	PARTICIPANT RECREATION:	0.00	0.00	0.00	0.00	0.00	0
001-452-248-000	Camps & Sport Leagues	1,260.00	1,300.00	0.00	0.00	1,300.00	0
001-452-250-000	Community Day	8,855.72	13,000.00	0.00	9,635.32	3,364.68	74
001-452-520-000	Library	8,866.00	9,309.30	0.00	9,309.30	0.00	100
	452 PARTICIPANT RECREATION:	**18,981.72**	**23,609.30**	**0.00**	**18,944.62**	**4,664.68**	**80**
001-454-000-000	PARKS:	0.00	0.00	0.00	0.00	0.00	0
001-454-436-000	Heebner Park- Utilities	3,963.28	3,876.00	1,070.88	4,390.73	514.73 -	113
001-454-437-001	Heebner Park- Athletic Fields	6,678.48	15,800.00	1,524.90	6,185.05	9,614.95	39
001-454-437-002	Heebner Park- Expenses	7,514.29	8,000.00	102.56	4,899.86	3,100.14	61
001-454-438-001	Mount Kirk Park- Athletic Fields	709.50	3,700.00	410.55	1,316.75	2,383.25	36
001-454-438-002	Mount Kirk Park- Expenses	1,128.67	1,550.00	681.18	1,883.31	333.31 -	122
001-454-438-003	Mount Kirk Park- Utilities	3,006.03	2,195.00	743.72	3,432.94	1,237.94 -	156
001-454-439-001	Sunny Brook Park- Athletic Fields	1,924.46	4,700.00	410.55	1,955.20	2,744.80	42
001-454-439-002	Sunny Brook Park- Expenses	2,660.91	3,602.00	0.00	1,412.15	2,189.85	39
001-454-446-000	Sunny Brook Park- Utilities	1,360.50	2,100.00	230.78	2,636.57	536.57 -	126

TOWNSHIP OF WORCESTER

Statement of Revenue and Expenditures

Expenditure Account	*Description*	*Prior Yr Expd*	*Budgeted*	*Current Expd*	*YTD Expended*	*Unexpended*	*% Expd*
001-454-470-000	Heyser Park- Horse Ring	575.00	500.00	0.00	0.00	500.00	0
001-454-471-000	Heyser Park- Expenses	0.00	350.00	0.00	176.00	174.00	50
001-454-480-000	Trail Expenses	913.68	2,850.00	0.00	501.70	2,348.30	18
001-454-490-000	Other Parks	2,758.04	7,160.00	1,576.52	4,386.74	2,773.26	61
	454 PARKS:	**33,192.84**	**56,383.00**	**6,751.64**	**33,177.00**	**23,206.00**	**59**
001-459-000-000	PUBLIC RELATIONS:	0.00	0.00	0.00	0.00	0.00	0
001-459-340-000	Public Relations- Community Newsletter	16,696.45	23,520.00	0.00	5,510.55	18,009.45	23
001-459-341-000	Public Relations- Other Communications	0.00	2,000.00	0.00	0.00	2,000.00	0
	459 PUBLIC RELATIONS:	**16,696.45**	**25,520.00**	**0.00**	**5,510.55**	**20,009.45**	**22**
001-486-000-000	INSURANCE:	0.00	0.00	0.00	0.00	0.00	0
001-486-350-000	Insurances	121,259.50	136,645.50	2,672.00	132,534.37	4,111.13	97
001-492-300-000	Transfer To Capital Fund	2,150,435.68	981,391.33	1,915,704.60	1,915,704.60	934,313.27 -	195
	Fund 001 Expenditure Totals	**5,380,441.42**	**4,616,173.59**	**2,148,671.55**	**5,279,741.32**	**663,567.73 -**	**114**

001 Fund	**Prior**	**Current**	**YTD**
Revenues:	**5,442,581.35**	**182,540.68**	**4,428,783.54**
Expenditures:	**5,380,441.42**	**2,148,671.55**	**5,279,741.32**
Net Income:	**62,139.93**	**1,966,130.87 -**	**850,957.78 -**

TOWNSHIP OF WORCESTER

Statement of Revenue and Expenditures

01/16/2026
10:47 AM

Revenue Account	Description	Prior Yr Rev	Anticipated	Curr Rev	YTD Rev	Excess/Deficit	% Real
008-341-000-000	Interest Earnings	70,621.40	15,000.00	4,500.66	61,553.46	46,553.46	410
008-364-110-000	Tapping Fees	3,200.00	48,577.62	0.00	39,910.94	8,666.68 -	82
008-364-120-000	Sewer Fees- Residential	620,532.03	615,842.86	6,217.43	624,420.60	8,577.74	101
008-364-130-000	Sewer Fees- Commercial	162,911.05	150,000.00	1,888.18	164,136.48	14,136.48	109
008-364-140-000	Late Fees	10,022.16	8,000.00	427.62	10,947.76	2,947.76	137
008-364-150-000	Certification Fees	1,075.00	1,000.00	30.00	695.00	305.00 -	70
	364 Total	**797,740.24**	**823,420.48**	**8,563.23**	**840,110.78**	**16,690.30**	**102**
008-381-000-000	Miscellaneous Income	395,907.88	25.00	0.00	0.00	25.00 -	0
008-381-200-000	Insurance Proceeds	395,907.88 -	0.00	0.00	0.00	0.00	0
	381 Miscellaneous Income	**0.00**	**25.00**	**0.00**	**0.00**	**25.00 -**	**0**
008-392-300-000	Transfer from Capital Fund	946.66	0.00	0.00	0.00	0.00	0
	Fund 008 Revenue Totals	**869,308.30**	**838,445.48**	**13,063.89**	**901,664.24**	**63,218.76**	**107**

Expenditure Account	Description	Prior Yr Expd	Budgeted	Current Expd	YTD Expended	Unexpended	% Expd
008-429-000-000	WASTWATER COLLECTION AND TREATMENT	0.00	0.00	0.00	0.00	0.00	0
008-429-242-000	Alarm Services	601.55	1,232.00	0.00	2,006.57	774.57 -	163
008-429-300-000	Other Expenses	229,663.61	209,652.00	22,106.23	243,335.58	33,683.58 -	116
008-429-313-000	Engineering	10,263.14	10,000.00	213.50	9,748.00	252.00	97
008-429-314-000	Legal	4,361.58	5,000.00	102.00	1,762.51	3,237.49	35
008-429-316-000	Plant Operations	90,035.00	91,056.00	76.50	74,902.41	16,153.59	82
008-429-321-000	Telephone	1,072.67	1,080.00	139.24	1,124.26	44.26 -	104
008-429-361-000	Utilities	123,667.17	135,000.00	21,460.55	131,453.95	3,546.05	97
008-429-374-000	Equipment & Repairs	29,435.51	27,960.00	2,979.94	26,019.20	1,940.80	93
008-429-421-001	Center Point- Operations	5,910.00	6,444.00	0.00	5,070.00	1,374.00	79

TOWNSHIP OF WORCESTER

Statement of Revenue and Expenditures

01/16/2026
10:47 AM

Expenditure Account	Description	Prior Yr Expd	Budgeted	Current Expd	YTD Expended	Unexpended	% Expd
008-429-421-002	Center Point- Utilities & Repairs	5,316.68	7,572.00	732.78	7,451.50	120.50	98
008-429-422-001	Meadowood- Operations	5,910.00	6,444.00	0.00	5,177.00	1,267.00	80
008-429-422-002	Meadowood- Utilities & Repairs	3,528.70	6,540.00	662.06	6,493.61	46.39	99
008-429-423-001	Heritage Village- Operations	5,417.50	6,444.00	0.00	5,070.00	1,374.00	79
008-429-423-002	Heritage Village- Utilities & Repairs	4,031.60	6,648.00	802.47	5,131.29	1,516.71	77
008-429-424-001	Fawn Creek- Operations	7,065.00	6,444.00	0.00	5,337.50	1,106.50	83
008-429-424-002	Fawn Creek- Utilities & Repairs	3,474.99	5,532.00	512.91	4,708.66	823.34	85
008-429-425-001	Chadwick Place- Operations	5,910.00	6,444.00	0.00	5,070.00	1,374.00	79
008-429-425-002	Chadwick Place- Utilities & Repairs	3,099.61	5,700.00	580.46	4,528.98	1,171.02	79
008-429-426-001	Adair Pump- Operations	6,787.50	6,444.00	0.00	5,070.00	1,374.00	79
008-429-426-002	Adair Pump- Utilities & Repairs	4,079.32	5,580.00	343.38	5,060.52	519.48	91
008-429-700-000	Capital Improvements	93,008.54	89,880.00	6,759.25	174,958.76	85,078.76 -	195
008-429-800-000	Depreciation	313,669.00	0.00	0.00	0.00	0.00	0
	429 WASTWATER COLLECTION AND TREATM	**956,308.67**	**647,096.00**	**57,471.27**	**729,480.30**	**82,384.30 -**	**113**
008-471-000-000	DEBT PRINCIPAL:	0.00	0.00	0.00	0.00	0.00	0
008-471-200-000	General Obligation Bond- Principal	0.00	130,000.00	135,000.00	135,000.00	5,000.00 -	104
008-472-000-000	DEBT INTEREST:	0.00	0.00	0.00	0.00	0.00	0
008-472-200-000	General Obligation Bond- Interest	36,556.26	41,431.26	16,928.13	33,856.26	7,575.00	82
008-475-000-000	Fiscal Agent Fees- 2016 Bond	1,050.00	1,100.00	0.00	1,050.00	50.00	95
008-486-000-000	INSURANCE:	0.00	0.00	0.00	0.00	0.00	0
008-486-350-000	Insurance Expense	6,689.50	6,971.50	0.00	6,971.50	0.00	100
	Fund 008 Expenditure Totals	**1,000,604.43**	**826,598.76**	**209,399.40**	**906,358.06**	**79,759.30 -**	**110**

TOWNSHIP OF WORCESTER

Statement of Revenue and Expenditures

008 Fund	Prior	Current	YTD
Revenues:	869,308.30	13,063.89	901,664.24
Expenditures:	1,000,604.43	209,399.40	906,358.06
Net Income:	131,296.13 -	196,335.51 -	4,693.82 -

TOWNSHIP OF WORCESTER

Statement of Revenue and Expenditures

01/16/2026
10:47 AM

Revenue Account	Description	Prior Yr Rev	Anticipated	Curr Rev	YTD Rev	Excess/Deficit	% Real
030-341-000-000	Interest Earnings	876,161.07	720,000.00	61,117.62	786,544.65	66,544.65	109
030-354-351-000	Grants	193,560.00	173,442.00	0.00	0.00	173,442.00 -	0
030-363-100-000	Traffic Impact Fees	66,183.77	14,204.00	6,250.00	19,672.39	5,468.39	138
030-381-000-000	Miscellaneous Income	3,500.00	2,000.00	6,000.00	8,388.75	6,388.75	419
030-392-010-000	Transfer From General Fund	2,150,435.68	981,391.33	1,915,704.60	1,915,704.60	934,313.27	195
030-395-000-000	Refund of Prior Year Expenditures	8,100.00	0.00	0.00	0.00	0.00	0
	Fund 030 Revenue Totals	**3,297,940.52**	**1,891,037.33**	**1,989,072.22**	**2,730,310.39**	**839,273.06**	**144**

Expenditure Account	Description	Prior Yr Expd	Budgeted	Current Expd	YTD Expended	Unexpended	% Expd
030-405-000-000	SECRETARY/CLERK:	0.00	0.00	0.00	0.00	0.00	0
030-405-720-000	Office Equipment	7,440.73	44,500.00	0.00	4,986.89	39,513.11	11
030-409-000-000	GOVERNMENT BUIILDINGS & PLANTS:	0.00	0.00	0.00	0.00	0.00	0
030-409-600-000	Building Improvements	3,696.24	51,500.00	0.00	14,293.00	37,207.00	28
030-430-600-000	Capital Roads	1,286,036.57	1,377,070.00	466,955.90	619,046.93	758,023.07	45
030-430-740-000	Equipment Purchases	134,738.97	425,173.42	1,903.98	406,150.99	19,022.43	96
	430 Total	**1,420,775.54**	**1,802,243.42**	**468,859.88**	**1,025,197.92**	**777,045.50**	**57**
030-433-600-000	Traffic Signs & Signals	12,228.00	33,000.00	0.00	0.00	33,000.00	0
030-454-600-000	Parks and Trails	210,489.29	411,800.00	74,654.72	229,660.49	182,139.51	56

TOWNSHIP OF WORCESTER

Statement of Revenue and Expenditures

01/16/2026
10:47 AM

Expenditure Account	*Description*	*Prior Yr Expd*	*Budgeted*	*Current Expd*	*YTD Expended*	*Unexpended*	*% Expd*
030-454-710-000	Land Acqusition	10,386.41	31,000.00	0.00	0.00	31,000.00	0
	454 Total	**220,875.70**	**442,800.00**	**74,654.72**	**229,660.49**	**213,139.51**	**52**
030-471-201-000	Bond principal	35,000.00	0.00	0.00	0.00	0.00	0
030-472-200-000	Loan Interest	100,808.06	135,908.85	0.00	135,908.85	0.00	100
030-492-010-000	Transfer to General Fund	350,000.00	0.00	0.00	0.00	0.00	0
030-492-080-000	Transfer to Sewer Fund	946.66	0.00	0.00	0.00	0.00	0
	492 Total	**350,946.66**	**0.00**	**0.00**	**0.00**	**0.00**	**0**
	Fund 030 Expenditure Totals	**2,151,770.93**	**2,509,952.27**	**543,514.60**	**1,410,047.15**	**1,099,905.12**	**56**

030 Fund	**Prior**	**Current**	**YTD**
Revenues:	**3,297,940.52**	**1,989,072.22**	**2,730,310.39**
Expenditures:	**2,151,770.93**	**543,514.60**	**1,410,047.15**
Net Income:	**1,146,169.59**	**1,445,557.62**	**1,320,263.24**

TOWNSHIP OF WORCESTER

Statement of Revenue and Expenditures

01/16/2026
10:47 AM

Revenue Account	*Description*	*Prior Yr Rev*	*Anticipated*	*Curr Rev*	*YTD Rev*	*Excess/Deficit*	*% Real*
035-341-000-000	Interest Earnings	15,747.02	6,000.00	1,501.23	16,604.83	10,604.83	277
035-355-020-000	Liquid Fuel Funds	357,387.92	355,778.42	0.00	363,411.52	7,633.10	102
	Fund 035 Revenue Totals	**373,134.94**	**361,778.42**	**1,501.23**	**380,016.35**	**18,237.93**	**105**

Expenditure Account	*Description*	*Prior Yr Expd*	*Budgeted*	*Current Expd*	*YTD Expended*	*Unexpended*	*% Expd*
035-438-000-000	ROADS & BRIDGES:	0.00	0.00	0.00	0.00	0.00	0
035-438-370-000	Road Maintenance Contractor	350,000.00	0.00	357,000.00	357,000.00	357,000.00 -	0
	Fund 035 Expenditure Totals	**350,000.00**	**0.00**	**357,000.00**	**357,000.00**	**357,000.00 -**	**0**

035 Fund	**Prior**	**Current**	**YTD**
Revenues:	**373,134.94**	**1,501.23**	**380,016.35**
Expenditures:	**350,000.00**	**357,000.00**	**357,000.00**
Net Income:	**23,134.94**	**355,498.77 -**	**23,016.35**

TOWNSHIP OF WORCESTER
Statement of Revenue and Expenditures

Revenue Account	*Description*	*Prior Yr Rev*	*Anticipated*	*Curr Rev*	*YTD Rev*	*Excess/Deficit*	*% Real*
040-341-109-000	Interest 1622 Hollow Road	278.12	0.00	18.58	238.19	238.19	0
040-341-200-000	Interest Earnings Developers	1,328.64	0.00	71.67	975.69	975.69	0
	341 Total	**1,606.76**	**0.00**	**90.25**	**1,213.88**	**1,213.88**	**0**
	Fund 040 Revenue Totals	**1,606.76**	**0.00**	**90.25**	**1,213.88**	**1,213.88**	**0**

040 Fund	**Prior**	**Current**	**YTD**
Revenues:	**1,606.76**	**90.25**	**1,213.88**
Expenditures:	**0.00**	**0.00**	**0.00**
Net Income:	**1,606.76**	**90.25**	**1,213.88**

Grand Totals	**Prior**	**Current**	**YTD**
Revenues:	**9,984,571.87**	**2,186,268.27**	**8,441,988.40**
Expenditures:	**8,882,816.78**	**3,258,585.55**	**7,953,146.53**
Net Income:	**1,101,755.09**	**1,072,317.28 -**	**488,841.87**

Worcester Volunteer Fire Department

Worcester, PA

This report was generated on 1/4/2026 9:14:23 PM

Incidents by Shift for Date Range

Start Date: 12/01/2025 | End Date: 12/31/2025

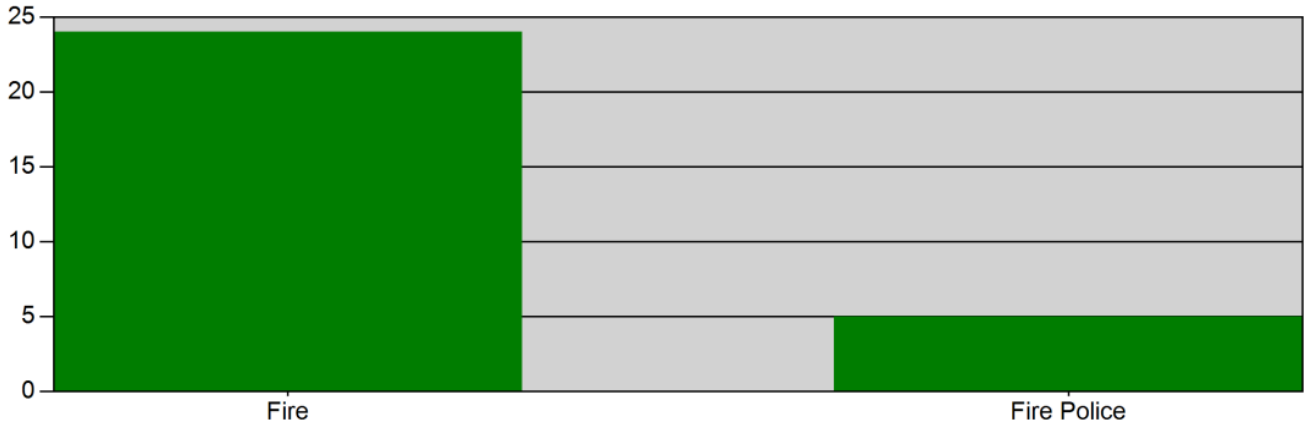

SHIFT	# INCIDENTS
Fire	24
Fire Police	5
TOTAL:	**29**

Fire Call Average Attendance: 17.3

FP Call Average Attendance: 4.2

Drill Average Attendance: 41

Daytime Calls Twp Employes Assisted On: 8

Call Man Hours: 181.9

Drill Man Hours: 82:00

Events: 4

Total Elapsed Time on Calls: 12:35:25

Worcester Volunteer Fire Department

Worcester, PA

This report was generated on 1/4/2026 9:17:28 PM

Count of Incidents by Incident Type per Zone

Incident Status: Reviewed | Start Date: 12/01/2025 | End Date: 12/31/2025

% of Incidents per Zone

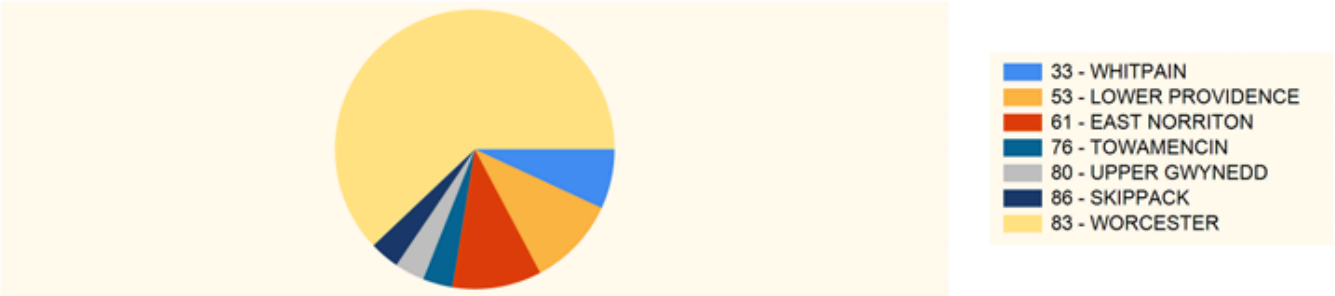

INCIDENT TYPE	# INCIDENTS	% of TOTAL
33 - WHITPAIN		
111 - Building fire	1	3.45%
611 - Dispatched & cancelled en route	1	3.45%
Zone: 33 - WHITPAIN Total Incident:	2	6.90%
53 - LOWER PROVIDENCE		
111 - Building fire	2	6.90%
551 - Assist police or other governmental agency	1	3.45%
Zone: 53 - LOWER PROVIDENCE Total Incident:	3	10.34%
61 - EAST NORRITON		
111 - Building fire	2	6.90%
322 - Motor vehicle accident with injuries	1	3.45%
Zone: 61 - EAST NORRITON Total Incident:	3	10.34%
76 - TOWAMENCIN		
424 - Carbon monoxide incident	1	3.45%
Zone: 76 - TOWAMENCIN Total Incident:	1	3.45%
80 - UPPER GWYNEDD		
111 - Building fire	1	3.45%
Zone: 80 - UPPER GWYNEDD Total Incident:	1	3.45%
83 - WORCESTER		
113 - Cooking fire, confined to container	1	3.45%
311 - Medical assist, assist EMS crew	2	6.90%
322 - Motor vehicle accident with injuries	5	17.24%
440 - Electrical wiring/equipment problem, other	1	3.45%
444 - Power line down	1	3.45%
500 - Service Call, other	1	3.45%
531 - Smoke or odor removal	1	3.45%
551 - Assist police or other governmental agency	1	3.45%

Report shows count of incidents for Status selected.

631 - Authorized controlled burning	1	3.45%
651 - Smoke scare, odor of smoke	1	3.45%
661 - EMS call, party transported by non-fire agency	1	3.45%
745 - Alarm system activation, no fire - unintentional	1	3.45%
746 - Carbon monoxide detector activation, no CO	1	3.45%
Zone: 83 - WORCESTER Total Incident:	18	62.07%
86 - SKIPPACK		
322 - Motor vehicle accident with injuries	1	3.45%
Zone: 86 - SKIPPACK Total Incident:	1	3.45%
TOTAL INCIDENTS FOR All ZONES:	**29**	**100%**

Report shows count of incidents for Status selected.

PENNSYLVANIA STATE POLICE
CAD Call Print Synopsis

Number of Records Returned: 177

Search Criteria: which_cad='P' and occ_date between '2025-12-01' and '2025-12-31' and municipality='46226' and jurisdiction='PA'

Call #	Report #	Call Date	Time	Initial Call Type	Final Call Type	Location	Founded	Cleared By
PA 2025-1492604	2025-1492604	Dec-01-2025	13:33:18	TS (TRAFFIC STOP CC)	TS (TRAFFIC STOP CC)	266 I476 N, WORCESTER TWP (MONTGOMERY)	Yes	TRAFFIC CITATION
PA 2025-1492671	2025-1492671	Dec-01-2025	13:55:28	MVCNR (MVC - NON-REPORTABLE)	MVCNR (MVC - NON-REPORTABLE)	MILL RD / VALLEY FORGE RD, WORCESTER TWP (MONTGOMERY)	Yes	TRACS CRASH REPORT
PA 2025-1492722	2025-1492722	Dec-01-2025	14:08:27	ILNZN (INTERSTATE HIGHWAY - CLEAR LINE ZONE CC)	ILNZN (INTERSTATE HIGHWAY - CLEAR LINE ZONE CC)	270 I476 N [ZONE 22, WORCESTER TWP (MONTGOMERY)	Yes	CLOSED CAD CALL
PA 2025-1493133	2025-1493133	Dec-01-2025	15:47:59	911 (911 HANG UP CALL GO)	911 (911 HANG UP CALL GO)	902 PATRIOT LN, WORCESTER TWP (MONTGOMERY)	Yes	GENERAL OFFENSE
PA 2025-1499087	2025-1499087	Dec-02-2025	19:47:03	TS (TRAFFIC STOP CC)	TS (TRAFFIC STOP CC)	3200 BLOCK SKIPPACK PIKE, WORCESTER TWP (MONTGOMERY)	Yes	WARNING (TRAFFIC STOP)
PA 2025-1499427	2025-1499427	Dec-02-2025	23:01:56	ALARMB(ALARM - BURGLAR)	ALRMF (ALARM FALSE FAULT CC)	2520 BRUNER CIR, WORCESTER TWP (MONTGOMERY)	Yes	CLOSED CAD CALL
PA 2025-1499662	2025-1499662	Dec-03-2025	03:49:32	ALARMB(ALARM - BURGLAR)	ALRMF (ALARM FALSE FAULT CC)	2599 W TOWNSHIP LINE RD, WORCESTER TWP (MONTGOMERY)	Yes	CLOSED CAD CALL
PA 2025-1501007	2025-1501007	Dec-03-2025	09:58:35	DOAN (DEATH - NATURAL)	DOAN (DEATH - NATURAL)	3205 SKIPPACK PIKE, WORCESTER TWP (MONTGOMERY)	Yes	GENERAL OFFENSE
PA 2025-1501315	2025-1501315	Dec-03-2025	11:00:45	RAOGO (REQUEST ASSIST - OTHER AGENCY GO)	RAOGO (REQUEST ASSIST - OTHER AGENCY GO)	2064 SHEARER RD, WORCESTER TWP (MONTGOMERY)	Yes	GENERAL OFFENSE
PA 2025-1502035	2025-1502035	Dec-03-2025	14:07:48	SEEOFC(SEE OFFICER GO)	SEEOFC(SEE OFFICER GO)	3429 MILL RD, WORCESTER TWP (MONTGOMERY)	Yes	GENERAL OFFENSE
PA 2025-1502587	2025-1502587	Dec-03-2025	16:07:35	ISTAT (INTERSTATE HIGHWAY - STATIONARY PATROL CC)	ISTAT (INTERSTATE HIGHWAY - STATIONARY PATROL CC)	271 I476 N, WORCESTER TWP (MONTGOMERY)	Yes	CLOSED CAD CALL
PA 2025-1502589	2025-1502589	Dec-03-2025	16:08:15	ISTAT (INTERSTATE HIGHWAY - STATIONARY PATROL CC)	ISTAT (INTERSTATE HIGHWAY - STATIONARY PATROL CC)	271 I476 N, WORCESTER TWP (MONTGOMERY)	Yes	CLOSED CAD CALL
PA 2025-1503603	2025-1503603	Dec-03-2025	21:44:43	MVCNR (MVC - NON-REPORTABLE)	CANCEL(CANCELLED BY COMPLAINANT X)	W GERMANTOWN PIKE / VALLEY FORGE RD, WORCESTER TWP (MONTGOMERY)	Yes	CANCELLED
PA 2025-1503818	2025-1503818	Dec-03-2025	23:51:14	TS (TRAFFIC STOP CC)	TS (TRAFFIC STOP CC)	400 BLOCK E MOUNT KIRK AVE, WORCESTER TWP (MONTGOMERY)	Yes	WARNING (TRAFFIC STOP)
PA 2025-1506216	2025-1506216	Dec-04-2025	14:39:32	MVCNR (MVC - NON-REPORTABLE)	MVCNR (MVC - NON-REPORTABLE)	E MOUNT KIRK AVE / W GERMANTOWN PIKE, WORCESTER TWP (MONTGOMERY)	Yes	TRACS CRASH REPORT
PA 2025-1506964	2025-1506964	Dec-04-2025	17:49:19	TS (TRAFFIC STOP CC)	TS (TRAFFIC STOP CC)	1900 BLOCK HUNT VALLEY RD, WORCESTER TWP (MONTGOMERY)	Yes	WARNING (TRAFFIC STOP)
PA 2025-1507475	2025-1507475	Dec-04-2025	21:28:22	ALARMB(ALARM - BURGLAR)	ALRMF (ALARM FALSE FAULT CC)	2960 FIELDCREST WAY, WORCESTER TWP (MONTGOMERY)	Yes	CLOSED CAD CALL
PA 2025-1510446	2025-1510446	Dec-05-2025	15:27:42	MVCNR (MVC - NON-REPORTABLE)	MVCNR (MVC - NON-REPORTABLE)	SKIPPACK PIKE / S VALLEY FORGE RD, WORCESTER TWP (MONTGOMERY)	Yes	TRACS CRASH REPORT

PENNSYLVANIA STATE POLICE
CAD Call Print Synopsis

Call #	Report #	Call Date	Time	Initial Call Type	Final Call Type	Location	Founded	Cleared By
PA 2025-1510850	2025-1510850	Dec-05-2025	17:04:38	ALARMB(ALARM - BURGLAR)	ALRMF (ALARM FALSE FAULT CC)	1005 KRIEBEL MILL RD, WORCESTER TWP (MONTGOMERY)	Yes	CLOSED CAD CALL
PA 2025-1511148	2025-1511148	Dec-05-2025	18:42:02	911 (911 HANG UP CALL GO)	911 (911 HANG UP CALL GO)	LOCUST DR / SUNNY AYRE DR, WORCESTER TWP (MONTGOMERY)	Yes	GENERAL OFFENSE
PA 2025-1513268	2025-1513268	Dec-06-2025	11:08:12	ALARMB(ALARM - BURGLAR)	CANCEL(CANCELLED BY COMPLAINANT X)	3213 HOGARTH LN, WORCESTER TWP (MONTGOMERY)	Yes	CANCELLED
PA 2025-1513729	2025-1513729	Dec-06-2025	14:20:08	MVCHR (MVC - HIT AND RUN, NO INJURIES)	MVCNR (MVC - NON-REPORTABLE)	SKIPPACK PIKE / BUSTARD RD, WORCESTER TWP (MONTGOMERY)	Yes	TRACS CRASH REPORT
PA 2025-1514191	2025-1514191	Dec-06-2025	16:28:58	911 (911 HANG UP CALL GO)	911 (911 HANG UP CALL GO)	3425 SKIPPACK PIKE, WORCESTER TWP (MONTGOMERY)	Yes	GENERAL OFFENSE
PA 2025-1514452	2025-1514452	Dec-06-2025	18:14:40	911 (911 HANG UP CALL GO)	911 (911 HANG UP CALL GO)	2954 SKIPPACK PIKE, WORCESTER TWP (MONTGOMERY)	Yes	GENERAL OFFENSE
PA 2025-1514628	2025-1514628	Dec-06-2025	19:31:28	TS (TRAFFIC STOP CC)	TS (TRAFFIC STOP CC)	2900 BLOCK SKIPPACK PIKE, WORCESTER TWP (MONTGOMERY)	Yes	TRAFFIC CITATION
PA 2025-1514725	2025-1514725	Dec-06-2025	20:11:30	SUSPP (SUSPICIOUS PERSON GO)	SEEOFC(SEE OFFICER GO)	2512 SEVERN CT, WORCESTER TWP (MONTGOMERY)	Yes	GENERAL OFFENSE
PA 2025-1516170	2025-1516170	Dec-07-2025	08:10:08	302 (MENTAL HEALTH ACT GO)	DOMO (DOMESTIC - OTHER GO)	116 BRINDLE CT, WORCESTER TWP (MONTGOMERY)	Yes	GENERAL OFFENSE
PA 2025-1517477	2025-1517477	Dec-07-2025	16:41:08	SEEOFC(SEE OFFICER GO)	SEEOFC(SEE OFFICER GO)	2124 SCHULTZ RD, WORCESTER TWP (MONTGOMERY)	Yes	GENERAL OFFENSE
PA 2025-1519638	2025-1519638	Dec-08-2025	08:51:57	ALARMB(ALARM - BURGLAR)	CANCEL(CANCELLED BY COMPLAINANT X)	3009 W GERMANTOWN PIKE, WORCESTER TWP (MONTGOMERY)	Yes	CANCELLED
PA 2025-1522432	2025-1522432	Dec-08-2025	21:49:47	ALARMB(ALARM - BURGLAR)	ALRMF (ALARM FALSE FAULT CC)	2111 COUNTRY VIEW LN, WORCESTER TWP (MONTGOMERY)	Yes	CLOSED CAD CALL
PA 2025-1523594	2025-1523594	Dec-09-2025	07:41:56	MVCNR (MVC - NON-REPORTABLE)	MVCNR (MVC - NON-REPORTABLE)	S VALLEY FORGE RD / SKIPPACK PIKE, WORCESTER TWP (MONTGOMERY)	Yes	TRACS CRASH REPORT
PA 2025-1523938	2025-1523938	Dec-09-2025	08:37:58	ROAD (ROAD HAZARD - ANIMAL - DEBRIS CC)	ROAD (ROAD HAZARD - ANIMAL - DEBRIS CC)	BETHEL RD / SKIPPACK PIKE, WORCESTER TWP (MONTGOMERY)	Yes	CLOSED CAD CALL
PA 2025-1526167	2025-1526167	Dec-09-2025	16:06:19	TS (TRAFFIC STOP CC)	TS (TRAFFIC STOP CC)	262 I476 N, WORCESTER TWP (MONTGOMERY)	Yes	TRAFFIC CITATION
PA 2025-1526229	2025-1526229	Dec-09-2025	16:19:04	TS (TRAFFIC STOP CC)	TS (TRAFFIC STOP CC)	273 I476 N, WORCESTER TWP (MONTGOMERY)	Yes	TRAFFIC CITATION
PA 2025-1526960	2025-1526960	Dec-09-2025	19:53:22	TS (TRAFFIC STOP CC)	TS (TRAFFIC STOP CC)	900 BLK MORRIS RD[MORRIS RD, WORCESTER TWP (MONTGOMERY)	Yes	TRAFFIC CITATION
PA 2025-1527090	2025-1527090	Dec-09-2025	20:43:38	TS (TRAFFIC STOP CC)	TS (TRAFFIC STOP CC)	1900 BLK VALLEY FORGE RD[VALLEY FORGE RD, WORCESTER TWP (MONTGOMERY)	Yes	TRAFFIC CITATION

PENNSYLVANIA STATE POLICE
CAD Call Print Synopsis

Call #	Report #	Call Date	Time	Initial Call Type	Final Call Type	Location	Founded	Cleared By
PA 2025-1527120	2025-1527120	Dec-09-2025	20:56:27	TS (TRAFFIC STOP CC)	TS (TRAFFIC STOP CC)	800 BLOCK N PARK AVE, WORCESTER TWP (MONTGOMERY)	Yes	WARNING (TRAFFIC STOP)
PA 2025-1527224	2025-1527224	Dec-09-2025	21:46:24	PATCHK(PATROL CHECK CC)	PATCHK(PATROL CHECK CC)	2851 DEFFORD RD, WORCESTER TWP (MONTGOMERY)	Yes	CLOSED CAD CALL
PA 2025-1528132	2025-1528132	Dec-10-2025	07:06:41	TS (TRAFFIC STOP CC)	TS (TRAFFIC STOP CC)	267 I476 S, WORCESTER TWP (MONTGOMERY)	Yes	WARNING (TRAFFIC STOP)
PA 2025-1530460	2025-1530460	Dec-10-2025	15:03:30	ILNZN (INTERSTATE HIGHWAY - CLEAR LINE ZONE CC)	ILNZN (INTERSTATE HIGHWAY - CLEAR LINE ZONE CC)	258 I476 S, WORCESTER TWP (MONTGOMERY)	Yes	CLOSED CAD CALL
PA 2025-1533927	2025-1533927	Dec-11-2025	11:40:43	PATCHK(PATROL CHECK CC)	PATCHK(PATROL CHECK CC)	BUSTARD RD / SADDLE WOOD CT, WORCESTER TWP (MONTGOMERY)	Yes	CLOSED CAD CALL
PA 2025-1534781	2025-1534781	Dec-11-2025	15:30:28	PATCHK(PATROL CHECK CC)	PATCHK(PATROL CHECK CC)	3310 STUMP HALL RD, WORCESTER TWP (MONTGOMERY)	Yes	CLOSED CAD CALL
PA 2025-1535068	2025-1535068	Dec-11-2025	16:44:11	MVCNR (MVC - NON-REPORTABLE)	MVCNR (MVC - NON-REPORTABLE)	SKIPPACK PIKE / S VALLEY FORGE RD, WORCESTER TWP (MONTGOMERY)	Yes	TRACS CRASH REPORT
PA 2025-1536643	2025-1536643	Dec-12-2025	06:42:15	MVCRNI(MVC - REPORTABLE, NO INJURIES)	MVCI (MVC - INJURIES)	S VALLEY FORGE RD / FISHER RD, WORCESTER TWP (MONTGOMERY)	Yes	TRACS CRASH REPORT
PA 2025-1537332	2025-1537332	Dec-12-2025	08:38:10	ALARMB(ALARM - BURGLAR)	ALRMF (ALARM FALSE FAULT CC)	2574 MUIRFIELD WAY, WORCESTER TWP (MONTGOMERY)	Yes	CLOSED CAD CALL
PA 2025-1537437	2025-1537437	Dec-12-2025	09:06:41	ILNZN (INTERSTATE HIGHWAY - CLEAR LINE ZONE CC)	ILNZN (INTERSTATE HIGHWAY - CLEAR LINE ZONE CC)	274 I476 S, WORCESTER TWP (MONTGOMERY)	Yes	CLOSED CAD CALL
PA 2025-1538983	2025-1538983	Dec-12-2025	15:44:52	MVCNR (MVC - NON-REPORTABLE)	MVCNR (MVC - NON-REPORTABLE)	2222 S VALLEY FORGE RD, WORCESTER TWP (MONTGOMERY)	Yes	TRACS CRASH REPORT
PA 2025-1539434	2025-1539434	Dec-12-2025	17:52:14	ILNZN (INTERSTATE HIGHWAY - CLEAR LINE ZONE CC)	ILNZN (INTERSTATE HIGHWAY - CLEAR LINE ZONE CC)	258 I476 N, WORCESTER TWP (MONTGOMERY)	Yes	CLOSED CAD CALL
PA 2025-1540660	2025-1540660	Dec-13-2025	02:05:57	TS (TRAFFIC STOP CC)	TS (TRAFFIC STOP CC)	2200 BLOCK S VALLEY FORGE RD, WORCESTER TWP (MONTGOMERY)	Yes	WARNING (TRAFFIC STOP)
PA 2025-1541793	2025-1541793	Dec-13-2025	10:33:35	911 (911 HANG UP CALL GO)	911 (911 HANG UP CALL GO)	326 SILO MILL LN, WORCESTER TWP (MONTGOMERY)	Yes	GENERAL OFFENSE
PA 2025-1544413	2025-1544413	Dec-14-2025	01:38:10	MVCRNI(MVC - REPORTABLE, NO INJURIES)	MVCRNI(MVC - REPORTABLE, NO INJURIES)	BERKS RD / POTSHOP RD, WORCESTER TWP (MONTGOMERY)	Yes	TRACS CRASH REPORT
PA 2025-1544779	2025-1544779	Dec-14-2025	06:08:37	MVCRNI(MVC - REPORTABLE, NO INJURIES)	MVCRNI(MVC - REPORTABLE, NO INJURIES)	905 N TROOPER RD, WORCESTER TWP (MONTGOMERY)	Yes	TRACS CRASH REPORT
PA 2025-1544784	2025-1544784	Dec-14-2025	06:11:48	MVCRNI(MVC - REPORTABLE, NO INJURIES)	MVCNR (MVC - NON-REPORTABLE)	SKIPPACK PIKE / SHEARER RD, WORCESTER TWP (MONTGOMERY)	Yes	TRACS CRASH REPORT

PENNSYLVANIA STATE POLICE
CAD Call Print Synopsis

Call #	Report #	Call Date	Time	Initial Call Type	Final Call Type	Location	Founded	Cleared By
PA 2025-1544896	2025-1544896	Dec-14-2025	06:41:17	DISM (DISABLED MOTORIST CC)	DISM (DISABLED MOTORIST CC)	WATER STREET RD / VALLEY FORGE RD, WORCESTER TWP (MONTGOMERY)	Yes	CLOSED CAD CALL
PA 2025-1545387	2025-1545387	Dec-14-2025	08:11:03	DISM (DISABLED MOTORIST CC)	DISM (DISABLED MOTORIST CC)	SKIPPACK PIKE / BERKS RD, WORCESTER TWP (MONTGOMERY)	Yes	CLOSED CAD CALL
PA 2025-1546990	2025-1546990	Dec-14-2025	17:26:31	MVCNR (MVC - NON-REPORTABLE)	MVCNR (MVC - NON-REPORTABLE)	1567 POTSHOP RD, WORCESTER TWP (MONTGOMERY)	Yes	TRACS CRASH REPORT
PA 2025-1549242	2025-1549242	Dec-15-2025	09:51:55	DOM (DOMESTIC - INACTIVE)	DOMO (DOMESTIC - OTHER GO)	65 BRISTOL CT, WORCESTER TWP (MONTGOMERY)	Yes	GENERAL OFFENSE
PA 2025-1549669	2025-1549669	Dec-15-2025	11:32:16	MVCHR (MVC - HIT AND RUN, NO INJURIES)	MVCHR (MVC - HIT AND RUN, NO INJURIES)	1112 N PARK AVE, WORCESTER TWP (MONTGOMERY)	Yes	TRACS CRASH REPORT
PA 2025-1550009	2025-1550009	Dec-15-2025	12:47:19	MVCNR (MVC - NON-REPORTABLE)	CANCEL(CANCELLED BY COMPLAINANT X)	SKIPPACK PIKE / BETHEL RD, WORCESTER TWP (MONTGOMERY)	Yes	CANCELLED
PA 2025-1550225	2025-1550225	Dec-15-2025	13:46:48	TS (TRAFFIC STOP CC)	TS (TRAFFIC STOP CC)	269 I476 S, WORCESTER TWP (MONTGOMERY)	Yes	TRAFFIC CITATION
PA 2025-1553180	2025-1553180	Dec-16-2025	08:30:34	DISM (DISABLED MOTORIST CC)	TS (TRAFFIC STOP CC)	274 I476 N, WORCESTER TWP (MONTGOMERY)	Yes	TRAFFIC CITATION
PA 2025-1553488	2025-1553488	Dec-16-2025	09:39:07	SUAT (SUICIDE - ATTEMPT OR THREAT)	SUAT (SUICIDE - ATTEMPT OR THREAT)	2610 RESOLUTION RD, WORCESTER TWP (MONTGOMERY)	Yes	GENERAL OFFENSE
PA 2025-1556634	2025-1556634	Dec-16-2025	23:56:25	SEEOFC(SEE OFFICER GO)	SEEOFC(SEE OFFICER GO)	1701 GRANT RD, WORCESTER TWP (MONTGOMERY)	Yes	GENERAL OFFENSE
PA 2025-1557432	2025-1557432	Dec-17-2025	07:26:32	DSCHSC(DOMESTIC SECURITY CHECK - SCHOOL CC)	DSCHSC(DOMESTIC SECURITY CHECK - SCHOOL CC)	3200 BLOCK W GERMANTOWN PIKE, WORCESTER TWP (MONTGOMERY)	Yes	CLOSED CAD CALL
PA 2025-1557764	2025-1557764	Dec-17-2025	08:17:53	MVCNR (MVC - NON-REPORTABLE)	CANCEL(CANCELLED BY COMPLAINANT X)	S VALLEY FORGE RD / SKIPPACK PIKE, WORCESTER TWP (MONTGOMERY)	Yes	CANCELLED
PA 2025-1558970	2025-1558970	Dec-17-2025	12:18:36	MVCNR (MVC - NON-REPORTABLE)	MVCNR (MVC - NON-REPORTABLE)	1025 VALLEY FORGE RD [FAIRVIEW POST OFFICE, WORCESTER TWP (MONTGOMERY)	Yes	TRACS CRASH REPORT
PA 2025-1559466	2025-1559466	Dec-17-2025	14:19:05	ALARMB(ALARM - BURGLAR)	ALRMF (ALARM FALSE FAULT CC)	3215 HOGARTH LN, WORCESTER TWP (MONTGOMERY)	Yes	CLOSED CAD CALL
PA 2025-1559480	2025-1559480	Dec-17-2025	14:23:39	MVCNR (MVC - NON-REPORTABLE)	MVCNR (MVC - NON-REPORTABLE)	2005 S VALLEY FORGE RD, WORCESTER TWP (MONTGOMERY)	Yes	TRACS CRASH REPORT
PA 2025-1560301	2025-1560301	Dec-17-2025	17:14:02	ALARMB(ALARM - BURGLAR)	CANCEL(CANCELLED BY COMPLAINANT X)	1900 HOLLOW RD, WORCESTER TWP (MONTGOMERY)	Yes	CANCELLED
PA 2025-1561267	2025-1561267	Dec-17-2025	23:03:56	ROAD (ROAD HAZARD - ANIMAL - DEBRIS CC)	ROAD (ROAD HAZARD - ANIMAL - DEBRIS CC)	MORRIS RD / TRUMBAUER RD, WORCESTER TWP (MONTGOMERY)	Yes	CLOSED CAD CALL
PA 2025-1561522	2025-1561522	Dec-18-2025	01:56:38	SEEOFC(SEE OFFICER GO)	SEEOFC(SEE OFFICER GO)	3205 SKIPPACK PIKE, WORCESTER TWP (MONTGOMERY)	Yes	GENERAL OFFENSE

PENNSYLVANIA STATE POLICE
CAD Call Print Synopsis

Call #	Report #	Call Date	Time	Initial Call Type	Final Call Type	Location	Founded	Cleared By
PA 2025-1561632	2025-1561632	Dec-18-2025	05:08:30	ALARMB(ALARM - BURGLAR)	CANCEL(CANCELLED BY COMPLAINANT X)	1410 N GRANGE AVE, WORCESTER TWP (MONTGOMERY)	Yes	CANCELLED
PA 2025-1562177	2025-1562177	Dec-18-2025	07:28:00	WELCK (WELFARE CHECK GO)	WELCK (WELFARE CHECK GO)	943 N PARK AVE, WORCESTER TWP (MONTGOMERY)	Yes	GENERAL OFFENSE
PA 2025-1562407	2025-1562407	Dec-18-2025	08:06:27	OTHER (OTHER GO)	REFER (REFER TO OTHER AGENCY - PD R)	N WALES RD / MORRIS RD, WORCESTER TWP (MONTGOMERY)	Yes	REFER
PA 2025-1563654	2025-1563654	Dec-18-2025	13:07:12	RAOGO (REQUEST ASSIST - OTHER AGENCY GO)	RAOGO (REQUEST ASSIST - OTHER AGENCY GO)	133 MEADOW VIEW LN, WORCESTER TWP (MONTGOMERY)	Yes	GENERAL OFFENSE
PA 2025-1564066	2025-1564066	Dec-18-2025	14:47:35	MVCNR (MVC - NON-REPORTABLE)	MVCNR (MVC - NON-REPORTABLE)	W GERMANTOWN PIKE / E MOUNT KIRK AVE, WORCESTER TWP (MONTGOMERY)	Yes	TRACS CRASH REPORT
PA 2025-1564312	2025-1564312	Dec-18-2025	15:24:32	CY104 (CHILDLINE)	SEEOFC(SEE OFFICER GO)	943 HERITAGE DR, WORCESTER TWP (MONTGOMERY)	Yes	GENERAL OFFENSE
PA 2025-1564522	2025-1564522	Dec-18-2025	16:07:16	MVCNR (MVC - NON-REPORTABLE)	MVCNR (MVC - NON-REPORTABLE)	N WALES RD / MORRIS RD, WORCESTER TWP (MONTGOMERY)	Yes	TRACS CRASH REPORT
PA 2025-1564868	2025-1564868	Dec-18-2025	17:48:24	MVCIE (MVC - INJURIES AND ENTRAPMENT)	MVCI (MVC - INJURIES)	SKIPPACK PIKE / N WHITEHALL RD, WORCESTER TWP (MONTGOMERY)	Yes	TRACS CRASH REPORT
PA 2025-1566144	2025-1566144	Dec-19-2025	06:22:05	ROAD (ROAD HAZARD - ANIMAL - DEBRIS CC)	REFER (REFER TO OTHER AGENCY - PD R)	W GERMANTOWN PIKE / VALLEY FORGE RD, WORCESTER TWP (MONTGOMERY)	Yes	REFER
PA 2025-1568192	2025-1568192	Dec-19-2025	13:52:35	TS (TRAFFIC STOP CC)	TS (TRAFFIC STOP CC)	275 I476 S, WORCESTER TWP (MONTGOMERY)	Yes	TRAFFIC CITATION
PA 2025-1568280	2025-1568280	Dec-19-2025	14:05:41	TS (TRAFFIC STOP CC)	TS (TRAFFIC STOP CC)	256 I476 S, WORCESTER TWP (MONTGOMERY)	Yes	TRAFFIC CITATION
PA 2025-1568997	2025-1568997	Dec-19-2025	16:02:54	ALARMB(ALARM - BURGLAR)	CANCEL(CANCELLED BY COMPLAINANT X)	2607 RESOLUTION RD, WORCESTER TWP (MONTGOMERY)	Yes	CANCELLED
PA 2025-1569134	2025-1569134	Dec-19-2025	16:30:51	MVCI (MVC - INJURIES)	MVCI (MVC - INJURIES)	1970 VALLEY FORGE RD, WORCESTER TWP (MONTGOMERY)	Yes	TRACS CRASH REPORT
PA 2025-1569146	2025-1569146	Dec-19-2025	16:33:20	MVCHR (MVC - HIT AND RUN, NO INJURIES)	MVCHR (MVC - HIT AND RUN, NO INJURIES)	2913 SKIPPACK PIKE, WORCESTER TWP (MONTGOMERY)	Yes	TRACS CRASH REPORT
PA 2025-1569167	2025-1569167	Dec-19-2025	16:41:01	ROAD (ROAD HAZARD - ANIMAL - DEBRIS CC)	ROAD (ROAD HAZARD - ANIMAL - DEBRIS CC)	1704 KRIEBEL MILL RD, WORCESTER TWP (MONTGOMERY)	Yes	CLOSED CAD CALL
PA 2025-1569321	2025-1569321	Dec-19-2025	17:19:24	DSCHSC(DOMESTIC SECURITY CHECK - SCHOOL CC)	DSCHSC(DOMESTIC SECURITY CHECK - SCHOOL CC)	3017 SKIPPACK PIKE, WORCESTER TWP (MONTGOMERY)	Yes	CLOSED CAD CALL
PA 2025-1569385	2025-1569385	Dec-19-2025	17:37:39	ROAD (ROAD HAZARD - ANIMAL - DEBRIS CC)	ROAD (ROAD HAZARD - ANIMAL - DEBRIS CC)	2134 SCHULTZ RD, WORCESTER TWP (MONTGOMERY)	Yes	CLOSED CAD CALL

PENNSYLVANIA STATE POLICE
CAD Call Print Synopsis

Call #	Report #	Call Date	Time	Initial Call Type	Final Call Type	Location	Founded	Cleared By
PA 2025-1571454	2025-1571454	Dec-20-2025	08:25:08	DOAN (DEATH - NATURAL)	DOAN (DEATH - NATURAL)	2505 SPRING CREEK RD, WORCESTER TWP (MONTGOMERY)	Yes	GENERAL OFFENSE
PA 2025-1572226	2025-1572226	Dec-20-2025	12:37:26	DISM (DISABLED MOTORIST CC)	DISM (DISABLED MOTORIST CC)	270 I476 S, WORCESTER TWP (MONTGOMERY)	Yes	CLOSED CAD CALL
PA 2025-1572358	2025-1572358	Dec-20-2025	13:12:30	TS (TRAFFIC STOP CC)	TS (TRAFFIC STOP CC)	269 I476 N, WORCESTER TWP (MONTGOMERY)	Yes	TRAFFIC CITATION
PA 2025-1572389	2025-1572389	Dec-20-2025	13:24:36	TS (TRAFFIC STOP CC)	TS (TRAFFIC STOP CC)	274 I476 N, WORCESTER TWP (MONTGOMERY)	Yes	TRAFFIC CITATION
PA 2025-1574751	2025-1574751	Dec-21-2025	06:18:11	ILNZN (INTERSTATE HIGHWAY - CLEAR LINE ZONE CC)	ILNZN (INTERSTATE HIGHWAY - CLEAR LINE ZONE CC)	265 I476 S, WORCESTER TWP (MONTGOMERY)	Yes	CLOSED CAD CALL
PA 2025-1575516	2025-1575516	Dec-21-2025	10:00:06	HOUSCK(HOUSE CHECK CC)	HOUSCK(HOUSE CHECK CC)	2500 SEVERN CT, WORCESTER TWP (MONTGOMERY)	Yes	CLOSED CAD CALL
PA 2025-1575545	2025-1575545	Dec-21-2025	10:08:02	MVCNR (MVC - NON-REPORTABLE)	MVCNR (MVC - NON-REPORTABLE)	1700 N WHITEHALL RD, WORCESTER TWP (MONTGOMERY)	Yes	TRACS CRASH REPORT
PA 2025-1578035	2025-1578035	Dec-22-2025	05:16:21	MVCRNI(MVC - REPORTABLE, NO INJURIES)	DISMT (DISABLED MOTORIST ON ROAD CC)	QUARRY HALL RD / GRIFFITH RD, WORCESTER TWP (MONTGOMERY)	Yes	CLOSED CAD CALL
PA 2025-1579096	2025-1579096	Dec-22-2025	09:31:55	TS (TRAFFIC STOP CC)	TS (TRAFFIC STOP CC)	256 I476 N, WORCESTER TWP (MONTGOMERY)	Yes	TRAFFIC CITATION
PA 2025-1579165	2025-1579165	Dec-22-2025	09:46:30	MVCNR (MVC - NON-REPORTABLE)	CANCEL(CANCELLED BY COMPLAINANT X)	S VALLEY FORGE RD / SKIPPACK PIKE, WORCESTER TWP (MONTGOMERY)	Yes	CANCELLED
PA 2025-1579217	2025-1579217	Dec-22-2025	10:00:07	HOUSCK(HOUSE CHECK CC)	HOUSCK(HOUSE CHECK CC)	2500 SEVERN CT, WORCESTER TWP (MONTGOMERY)	Yes	CLOSED CAD CALL
PA 2025-1581599	2025-1581599	Dec-22-2025	20:49:00	TS (TRAFFIC STOP CC)	DISM (DISABLED MOTORIST CC)	274 I476 S, WORCESTER TWP (MONTGOMERY)	Yes	CLOSED CAD CALL
PA 2025-1581815	2025-1581815	Dec-22-2025	22:46:48	ROAD (ROAD HAZARD - ANIMAL - DEBRIS CC)	ROAD (ROAD HAZARD - ANIMAL - DEBRIS CC)	3017 SKIPPACK PIKE, WORCESTER TWP (MONTGOMERY)	Yes	CLOSED CAD CALL
PA 2025-1582708	2025-1582708	Dec-23-2025	07:08:15	MVCNR (MVC - NON-REPORTABLE)	MVCRNI(MVC - REPORTABLE, NO INJURIES)	W TOWNSHIP LINE RD / N WHITEHALL RD, WORCESTER TWP (MONTGOMERY)	Yes	TRACS CRASH REPORT
PA 2025-1582811	2025-1582811	Dec-23-2025	07:32:27	MVCNR (MVC - NON-REPORTABLE)	MVCNR (MVC - NON-REPORTABLE)	N GRANGE AVE / GREEN HILL RD, WORCESTER TWP (MONTGOMERY)	Yes	TRACS CRASH REPORT
PA 2025-1582993	2025-1582993	Dec-23-2025	08:09:46	DISMT (DISABLED MOTORIST ON ROAD CC)	DISM (DISABLED MOTORIST CC)	W TOWNSHIP LINE RD / N WHITEHALL RD, WORCESTER TWP (MONTGOMERY)	Yes	CLOSED CAD CALL
PA 2025-1583457	2025-1583457	Dec-23-2025	10:00:07	HOUSCK(HOUSE CHECK CC)	HOUSCK(HOUSE CHECK CC)	2500 SEVERN CT, WORCESTER TWP (MONTGOMERY)	Yes	CLOSED CAD CALL
PA 2025-1583521	2025-1583521	Dec-23-2025	10:04:57	THEFTF(THEFT - FRAUD/FORGERY)	THEFTF(THEFT - FRAUD/FORGERY)	11 W ADAIR DR, WORCESTER TWP (MONTGOMERY)	Yes	GENERAL OFFENSE

PENNSYLVANIA STATE POLICE
CAD Call Print Synopsis

Call #	Report #	Call Date	Time	Initial Call Type	Final Call Type	Location	Founded	Cleared By
PA 2025-1584006	2025-1584006	Dec-23-2025	12:14:49	MVCRNI(MVC - REPORTABLE, NO INJURIES)	MVCRNI(MVC - REPORTABLE, NO INJURIES)	2604 SKIPPACK PIKE, WORCESTER TWP (MONTGOMERY)	Yes	TRACS CRASH REPORT
PA 2025-1584405	2025-1584405	Dec-23-2025	14:25:20	MVCI (MVC - INJURIES)	MVCI (MVC - INJURIES)	W TOWNSHIP LINE RD / N WHITEHALL RD, WORCESTER TWP (MONTGOMERY)	Yes	TRACS CRASH REPORT
PA 2025-1584904	2025-1584904	Dec-23-2025	16:47:27	MVCI (MVC - INJURIES)	MVCI (MVC - INJURIES)	276 I476 N, WORCESTER TWP (MONTGOMERY)	Yes	TRACS CRASH REPORT
PA 2025-1584927	2025-1584927	Dec-23-2025	16:52:31	MVCHR (MVC - HIT AND RUN, NO INJURIES)	MVCNR (MVC - NON-REPORTABLE)	S VALLEY FORGE RD / STEELMAN RD, WORCESTER TWP (MONTGOMERY)	Yes	TRACS CRASH REPORT
PA 2025-1585423	2025-1585423	Dec-23-2025	20:04:23	DOM (DOMESTIC - INACTIVE)	DOMO (DOMESTIC - OTHER GO)	1431 TWO GLENS LN, WORCESTER TWP (MONTGOMERY)	Yes	GENERAL OFFENSE
PA 2025-1587011	2025-1587011	Dec-24-2025	08:25:50	RAPDGO(REQUEST ASSIST - LOCAL PD GO)	CANCEL(CANCELLED BY COMPLAINANT X)	2039 WENTZ CHURCH RD, WORCESTER TWP (MONTGOMERY)	Yes	CANCELLED
PA 2025-1587193	2025-1587193	Dec-24-2025	09:05:13	ANIMAL(ANIMAL LOST - FOUND CC)	ANIMAL(ANIMAL LOST - FOUND CC)	1814 VALLEY FORGE RD, WORCESTER TWP (MONTGOMERY)	Yes	CLOSED CAD CALL
PA 2025-1587448	2025-1587448	Dec-24-2025	10:00:07	HOUSCK(HOUSE CHECK CC)	HOUSCK(HOUSE CHECK CC)	2500 SEVERN CT, WORCESTER TWP (MONTGOMERY)	Yes	CLOSED CAD CALL
PA 2025-1589327	2025-1589327	Dec-24-2025	17:17:28	DOM (DOMESTIC - INACTIVE)	DOMO (DOMESTIC - OTHER GO)	3000 LIBERTY LN, WORCESTER TWP (MONTGOMERY)	Yes	GENERAL OFFENSE
PA 2025-1589357	2025-1589357	Dec-24-2025	17:36:22	TS (TRAFFIC STOP CC)	TS (TRAFFIC STOP CC)	257 I476 N, WORCESTER TWP (MONTGOMERY)	Yes	TRAFFIC CITATION
PA 2025-1589865	2025-1589865	Dec-24-2025	20:16:09	911 (911 HANG UP CALL GO)	PATCHK(PATROL CHECK CC)	CEDARS HILL RD / SKIPPACK PIKE, WORCESTER TWP (MONTGOMERY)	Yes	CLOSED CAD CALL
PA 2025-1590961	2025-1590961	Dec-25-2025	07:15:38	ILNZN (INTERSTATE HIGHWAY - CLEAR LINE ZONE CC)	ILNZN (INTERSTATE HIGHWAY - CLEAR LINE ZONE CC)	266 I476 S [ZONE 22 SB, WORCESTER TWP (MONTGOMERY)	Yes	CLOSED CAD CALL
PA 2025-1591280	2025-1591280	Dec-25-2025	10:00:07	HOUSCK(HOUSE CHECK CC)	HOUSCK(HOUSE CHECK CC)	2500 SEVERN CT, WORCESTER TWP (MONTGOMERY)	Yes	CLOSED CAD CALL
PA 2025-1591925	2025-1591925	Dec-25-2025	15:10:11	911 (911 HANG UP CALL GO)	911 (911 HANG UP CALL GO)	1875 STEIGER RD, WORCESTER TWP (MONTGOMERY)	Yes	GENERAL OFFENSE
PA 2025-1592089	2025-1592089	Dec-25-2025	16:27:07	ALARMB(ALARM - BURGLAR)	ALRMF (ALARM FALSE FAULT CC)	2513 SEVERN CT, WORCESTER TWP (MONTGOMERY)	Yes	CLOSED CAD CALL
PA 2025-1592222	2025-1592222	Dec-25-2025	17:24:48	WELCK (WELFARE CHECK GO)	WELCK (WELFARE CHECK GO)	W GERMANTOWN PIKE / N PARK AVE, WORCESTER TWP (MONTGOMERY)	Yes	GENERAL OFFENSE
PA 2025-1592637	2025-1592637	Dec-25-2025	21:51:12	WELCK (WELFARE CHECK GO)	PATCHK(PATROL CHECK CC)	W GERMANTOWN PIKE / VALLEY FORGE RD, WORCESTER TWP (MONTGOMERY)	Yes	CLOSED CAD CALL

PENNSYLVANIA STATE POLICE
CAD Call Print Synopsis

Call #	Report #	Call Date	Time	Initial Call Type	Final Call Type	Location	Founded	Cleared By
PA 2025-1593055	2025-1593055	Dec-26-2025	02:01:31	ALARMB(ALARM - BURGLAR)	ALRMF (ALARM FALSE FAULT CC)	1900 HOLLOW RD, WORCESTER TWP (MONTGOMERY)	Yes	CLOSED CAD CALL
PA 2025-1593682	2025-1593682	Dec-26-2025	07:40:32	PATCHK(PATROL CHECK CC)	PATCHK(PATROL CHECK CC)	VALLEY FORGE RD / HICKORY HILL RD, WORCESTER TWP (MONTGOMERY)	Yes	CLOSED CAD CALL
PA 2025-1593687	2025-1593687	Dec-26-2025	07:42:02	MOTCAS(MOTOR CARRIER SAFETY CC)	MOTCAS(MOTOR CARRIER SAFETY CC)	267 I476 S, WORCESTER TWP (MONTGOMERY)	Yes	CLOSED CAD CALL
PA 2025-1593712	2025-1593712	Dec-26-2025	07:51:15	DSCHSC(DOMESTIC SECURITY CHECK - SCHOOL CC)	DSCHSC(DOMESTIC SECURITY CHECK - SCHOOL CC)	KRIEBEL MILL RD / GERMANTOWN PIKE [KRIEBEL MILL RD, WORCESTER TWP (MONTGOMERY)	Yes	CLOSED CAD CALL
PA 2025-1594322	2025-1594322	Dec-26-2025	10:00:08	HOUSCK(HOUSE CHECK CC)	HOUSCK(HOUSE CHECK CC)	2500 SEVERN CT, WORCESTER TWP (MONTGOMERY)	Yes	CLOSED CAD CALL
PA 2025-1595650	2025-1595650	Dec-26-2025	14:12:56	SUSPP (SUSPICIOUS PERSON GO)	WELCK (WELFARE CHECK GO)	1025 VALLEY FORGE RD, WORCESTER TWP (MONTGOMERY)	Yes	GENERAL OFFENSE
PA 2025-1595825	2025-1595825	Dec-26-2025	14:58:14	MOTCAS(MOTOR CARRIER SAFETY CC)	MOTCAS(MOTOR CARRIER SAFETY CC)	266 I476 S, WORCESTER TWP (MONTGOMERY)	Yes	CLOSED CAD CALL
PA 2025-1595926	2025-1595926	Dec-26-2025	15:02:13	ALARMB(ALARM - BURGLAR)	CANCEL(CANCELLED BY COMPLAINANT X)	3019 STUMP HALL RD, WORCESTER TWP (MONTGOMERY)	Yes	CANCELLED
PA 2025-1596050	2025-1596050	Dec-26-2025	15:30:34	MOTCAS(MOTOR CARRIER SAFETY CC)	MOTCAS(MOTOR CARRIER SAFETY CC)	271 I476 N, WORCESTER TWP (MONTGOMERY)	Yes	CLOSED CAD CALL
PA 2025-1596351	2025-1596351	Dec-26-2025	16:54:53	MVCRNI(MVC - REPORTABLE, NO INJURIES)	MVCNR (MVC - NON-REPORTABLE)	2000 BETHEL RD, WORCESTER TWP (MONTGOMERY)	Yes	TRACS CRASH REPORT
PA 2025-1597103	2025-1597103	Dec-26-2025	21:13:29	MVCUNK(MVC - UNKNOWN INJURIES)	MVCI (MVC - INJURIES)	257 I476 S, WORCESTER TWP (MONTGOMERY)	Yes	TRACS CRASH REPORT
PA 2025-1598638	2025-1598638	Dec-27-2025	09:24:22	PATCHK(PATROL CHECK CC)	PATCHK(PATROL CHECK CC)	1021 VALLEY FORGE RD, WORCESTER TWP (MONTGOMERY)	Yes	CLOSED CAD CALL
PA 2025-1598742	2025-1598742	Dec-27-2025	10:00:08	HOUSCK(HOUSE CHECK CC)	HOUSCK(HOUSE CHECK CC)	2500 SEVERN CT, WORCESTER TWP (MONTGOMERY)	Yes	CLOSED CAD CALL
PA 2025-1598881	2025-1598881	Dec-27-2025	10:29:36	DISM (DISABLED MOTORIST CC)	DISM (DISABLED MOTORIST CC)	VALLEY FORGE RD / LANE RD, WORCESTER TWP (MONTGOMERY)	Yes	CLOSED CAD CALL
PA 2025-1599247	2025-1599247	Dec-27-2025	12:02:27	MVCNR (MVC - NON-REPORTABLE)	MVCNR (MVC - NON-REPORTABLE)	SKIPPACK PIKE / N WHITEHALL RD, WORCESTER TWP (MONTGOMERY)	Yes	TRACS CRASH REPORT
PA 2025-1599663	2025-1599663	Dec-27-2025	13:39:54	SEEOFC(SEE OFFICER GO)	BURG (BURGLARY OR ATTEMPTED BURGLARY)	3232 SKIPPACK PIKE, WORCESTER TWP (MONTGOMERY)	Yes	GENERAL OFFENSE

PENNSYLVANIA STATE POLICE
CAD Call Print Synopsis

Call #	Report #	Call Date	Time	Initial Call Type	Final Call Type	Location	Founded	Cleared By
PA 2025-1600458	2025-1600458	Dec-27-2025	16:34:24	ILNZN (INTERSTATE HIGHWAY - CLEAR LINE ZONE CC)	ILNZN (INTERSTATE HIGHWAY - CLEAR LINE ZONE CC)	269 I476 S, WORCESTER TWP (MONTGOMERY)	Yes	CLOSED CAD CALL
PA 2025-1600882	2025-1600882	Dec-27-2025	18:19:38	WELCK (WELFARE CHECK GO)	RAPDGO(REQUEST ASSIST - LOCAL PD GO)	1126 VALLEY FORGE RD, WORCESTER TWP (MONTGOMERY)	Yes	GENERAL OFFENSE
PA 2025-1601457	2025-1601457	Dec-27-2025	20:59:26	ALARMB(ALARM - BURGLAR)	CANCEL(CANCELLED BY COMPLAINANT X)	314 SILO MILL LN, WORCESTER TWP (MONTGOMERY)	Yes	CANCELLED
PA 2025-1601810	2025-1601810	Dec-27-2025	22:58:05	RAOGO (REQUEST ASSIST - OTHER AGENCY GO)	RAOGO (REQUEST ASSIST - OTHER AGENCY GO)	1431 TWO GLENS LN, WORCESTER TWP (MONTGOMERY)	Yes	GENERAL OFFENSE
PA 2025-1602841	2025-1602841	Dec-28-2025	07:24:35	TS (TRAFFIC STOP CC)	TS (TRAFFIC STOP CC)	275 I476 N, WORCESTER TWP (MONTGOMERY)	Yes	TRAFFIC CITATION
PA 2025-1603323	2025-1603323	Dec-28-2025	10:00:09	HOUSCK(HOUSE CHECK CC)	HOUSCK(HOUSE CHECK CC)	2500 SEVERN CT, WORCESTER TWP (MONTGOMERY)	Yes	CLOSED CAD CALL
PA 2025-1603516	2025-1603516	Dec-28-2025	10:42:16	PATCHK(PATROL CHECK CC)	PATCHK(PATROL CHECK CC)	VALLEY FORGE RD / W GERMANTOWN PIKE, WORCESTER TWP (MONTGOMERY)	Yes	CLOSED CAD CALL
PA 2025-1603531	2025-1603531	Dec-28-2025	10:49:21	TRERDR(TRAFFIC VIOLATION/ERRATIC DRIVER CC)	PATCHK(PATROL CHECK CC)	SKIPPACK PIKE / N WHITEHALL RD, WORCESTER TWP (MONTGOMERY)	Yes	CLOSED CAD CALL
PA 2025-1604772	2025-1604772	Dec-28-2025	16:14:38	MVCNR (MVC - NON-REPORTABLE)	MVCNR (MVC - NON-REPORTABLE)	CHURCH RD / WHEATSHEAF LN, WORCESTER TWP (MONTGOMERY)	Yes	TRACS CRASH REPORT
PA 2025-1605279	2025-1605279	Dec-28-2025	18:52:49	RAPDGO(REQUEST ASSIST - LOCAL PD GO)	RAPDGO(REQUEST ASSIST - LOCAL PD GO)	2613 WINDSTORM WAY, WORCESTER TWP (MONTGOMERY)	Yes	GENERAL OFFENSE
PA 2025-1607329	2025-1607329	Dec-29-2025	10:00:09	HOUSCK(HOUSE CHECK CC)	HOUSCK(HOUSE CHECK CC)	2500 SEVERN CT, WORCESTER TWP (MONTGOMERY)	Yes	CLOSED CAD CALL
PA 2025-1607765	2025-1607765	Dec-29-2025	11:31:50	SEEOFC(SEE OFFICER GO)	SEEOFC(SEE OFFICER GO)	W GERMANTOWN PIKE / VALLEY FORGE RD [FAIRVIEW VILLAGE, WORCESTER TWP (MONTGOMERY)	Yes	GENERAL OFFENSE
PA 2025-1608466	2025-1608466	Dec-29-2025	14:21:20	TS (TRAFFIC STOP CC)	TS (TRAFFIC STOP CC)	269 I476 S, WORCESTER TWP (MONTGOMERY)	Yes	TRAFFIC CITATION
PA 2025-1608490	2025-1608490	Dec-29-2025	14:25:21	DOMA (DOMESTIC - IN PROGRESS)	HARASS (HARASSMENT - COMM - STALK - OTHER)	3101 SKIPPACK PIKE, WORCESTER TWP (MONTGOMERY)	Yes	GENERAL OFFENSE
PA 2025-1608500	2025-1608500	Dec-29-2025	14:29:45	ILNZN (INTERSTATE HIGHWAY - CLEAR LINE ZONE CC)	ILNZN (INTERSTATE HIGHWAY - CLEAR LINE ZONE CC)	269 I476 S [ZONE 22, WORCESTER TWP (MONTGOMERY)	Yes	CLOSED CAD CALL
PA 2025-1608897	2025-1608897	Dec-29-2025	15:50:29	IDTHFT(IDENTITY THEFT)	IDTHFT(IDENTITY THEFT)	2938 WOODLYN AVE, WORCESTER TWP (MONTGOMERY)	Yes	GENERAL OFFENSE

PENNSYLVANIA STATE POLICE
CAD Call Print Synopsis

Call #	Report #	Call Date	Time	Initial Call Type	Final Call Type	Location	Founded	Cleared By
PA 2025-1610565	2025-1610565	Dec-30-2025	05:35:46	ALARMB(ALARM - BURGLAR)	ALRMF (ALARM FALSE FAULT CC)	802 CHERRY CIR, WORCESTER TWP (MONTGOMERY)	Yes	CLOSED CAD CALL
PA 2025-1610604	2025-1610604	Dec-30-2025	06:00:16	ROAD (ROAD HAZARD - ANIMAL - DEBRIS CC)	ROAD (ROAD HAZARD - ANIMAL - DEBRIS CC)	3100 BLOCK SKIPPACK PIKE, WORCESTER TWP (MONTGOMERY)	Yes	CLOSED CAD CALL
PA 2025-1611072	2025-1611072	Dec-30-2025	07:32:34	PATCHK(PATROL CHECK CC)	PATCHK(PATROL CHECK CC)	1000 BLOCK KRIEBEL MILL RD, WORCESTER TWP (MONTGOMERY)	Yes	CLOSED CAD CALL
PA 2025-1611701	2025-1611701	Dec-30-2025	09:50:01	ROAD (ROAD HAZARD - ANIMAL - DEBRIS CC)	ROAD (ROAD HAZARD - ANIMAL - DEBRIS CC)	VALLEY FORGE RD / MOHILL DR, WORCESTER TWP (MONTGOMERY)	Yes	CLOSED CAD CALL
PA 2025-1611724	2025-1611724	Dec-30-2025	09:56:48	PATCHK(PATROL CHECK CC)	PATCHK(PATROL CHECK CC)	HEEBNER RD / SHEFLEY LN, WORCESTER TWP (MONTGOMERY)	Yes	CLOSED CAD CALL
PA 2025-1611742	2025-1611742	Dec-30-2025	10:00:10	HOUSCK(HOUSE CHECK CC)	HOUSCK(HOUSE CHECK CC)	2500 SEVERN CT, WORCESTER TWP (MONTGOMERY)	Yes	CLOSED CAD CALL
PA 2025-1612461	2025-1612461	Dec-30-2025	12:50:07	PATCHK(PATROL CHECK CC)	PATCHK(PATROL CHECK CC)	S VALLEY FORGE RD / FISHER RD, WORCESTER TWP (MONTGOMERY)	Yes	CLOSED CAD CALL
PA 2025-1612782	2025-1612782	Dec-30-2025	14:00:47	WELCK (WELFARE CHECK GO)	WELCK (WELFARE CHECK GO)	A - 3104 SKIPPACK PIKE, WORCESTER TWP (MONTGOMERY)	Yes	GENERAL OFFENSE
PA 2025-1613362	2025-1613362	Dec-30-2025	16:16:05	TS (TRAFFIC STOP CC)	TS (TRAFFIC STOP CC)	262 I476 N, WORCESTER TWP (MONTGOMERY)	Yes	TRAFFIC CITATION
PA 2025-1614183	2025-1614183	Dec-30-2025	20:31:57	WELCK (WELFARE CHECK GO)	WELCK (WELFARE CHECK GO)	326 SILO MILL LN, WORCESTER TWP (MONTGOMERY)	Yes	GENERAL OFFENSE
PA 2025-1614290	2025-1614290	Dec-30-2025	21:19:26	RAOGO (REQUEST ASSIST - OTHER AGENCY GO)	CANCEL(CANCELLED BY COMPLAINANT X)	3001 W GERMANTOWN PIKE [SUNOCO, WORCESTER TWP (MONTGOMERY)	Yes	CANCELLED
PA 2025-1614645	2025-1614645	Dec-31-2025	00:12:32	MVCUNK(MVC - UNKNOWN INJURIES)	MVCRNI(MVC - REPORTABLE, NO INJURIES)	TOWNSHIP LINE RD / VALLEY FORGE RD, WORCESTER TWP (MONTGOMERY)	Yes	TRACS CRASH REPORT
PA 2025-1614875	2025-1614875	Dec-31-2025	04:46:44	TS (TRAFFIC STOP CC)	TS (TRAFFIC STOP CC)	2900 BLOCK SKIPPACK PIKE, WORCESTER TWP (MONTGOMERY)	Yes	CLOSED CAD CALL
PA 2025-1614892	2025-1614892	Dec-31-2025	05:14:00	TS (TRAFFIC STOP CC)	TS (TRAFFIC STOP CC)	2900 BLOCK SKIPPACK PIKE, WORCESTER TWP (MONTGOMERY)	Yes	TRAFFIC CITATION
PA 2025-1614910	2025-1614910	Dec-31-2025	05:37:10	TS (TRAFFIC STOP CC)	TS (TRAFFIC STOP CC)	2900 BLOCK SKIPPACK PIKE, WORCESTER TWP (MONTGOMERY)	Yes	TRAFFIC CITATION
PA 2025-1616259	2025-1616259	Dec-31-2025	09:27:34	DSCHSC(DOMESTIC SECURITY CHECK - SCHOOL CC)	DSCHSC(DOMESTIC SECURITY CHECK - SCHOOL CC)	KRIEBEL MILL RD / MILL RD [KRIEBEL MILL RD, WORCESTER TWP (MONTGOMERY)	Yes	CLOSED CAD CALL
PA 2025-1616483	2025-1616483	Dec-31-2025	10:00:07	HOUSCK(HOUSE CHECK CC)	HOUSCK(HOUSE CHECK CC)	2500 SEVERN CT, WORCESTER TWP (MONTGOMERY)	Yes	CLOSED CAD CALL

PENNSYLVANIA STATE POLICE
CAD Call Print Synopsis

Call #	Report #	Call Date	Time	Initial Call Type	Final Call Type	Location	Founded	Cleared By
PA 2025-1616645	2025-1616645	Dec-31-2025	10:18:35	TS (TRAFFIC STOP CC)	TS (TRAFFIC STOP CC)	1400 BLOCK KRIEBEL MILL RD, WORCESTER TWP (MONTGOMERY)	Yes	TRAFFIC CITATION
PA 2025-1616940	2025-1616940	Dec-31-2025	10:53:43	TS (TRAFFIC STOP CC)	TS (TRAFFIC STOP CC)	1200 BLOCK N GRANGE AVE, WORCESTER TWP (MONTGOMERY)	Yes	TRAFFIC CITATION
PA 2025-1619515	2025-1619515	Dec-31-2025	16:58:39	ROAD (ROAD HAZARD - ANIMAL - DEBRIS CC)	ROAD (ROAD HAZARD - ANIMAL - DEBRIS CC)	GREEN HILL RD / STUMP HALL RD, WORCESTER TWP (MONTGOMERY)	Yes	CLOSED CAD CALL
PA 2025-1620216	2025-1620216	Dec-31-2025	19:11:37	TS (TRAFFIC STOP CC)	TS (TRAFFIC STOP CC)	2600 BLOCK SKIPPACK PIKE, WORCESTER TWP (MONTGOMERY)	Yes	TRAFFIC CITATION
PA 2025-1620547	2025-1620547	Dec-31-2025	20:24:32	TS (TRAFFIC STOP CC)	TS (TRAFFIC STOP CC)	264 I476 S, WORCESTER TWP (MONTGOMERY)	Yes	TRAFFIC CITATION

Skippack
Emergency
Medical
Services

4058 Mensch Rd
P.O. Box 59
Skippack, PA 19474

Business 610.454.9665
Fax 610.454.9666

Skippack EMS
December 2025 calls
Worcester Township

Calls dispatched	62
Transported	35
Refusals	6
No services *	4
Fire	0
Covered by other squads	17
Lift assist	0
Recall	0

* includes: accidental/false alarm for medical alert alarm, no patient found, deceased, or police matters

Skippack
Emergency
Medical
Services

4058 Mensch Rd
P.O. Box 59
Skippack, PA 19474

Business 610.454.9665
Fax 610.454.9666

Skippack EMS
Year-End 2025 calls
Worcester Township

Calls dispatched	648
Transported	346
Refusals	52
No services *	26
Fire	6
Covered by other squads	191
Lift assist	5
Recall	10

* includes: accidental/false alarm for medical alert alarm, no patient found, deceased, or police matters

Public Works Department Report

December 2025

1) **Road Maintenance**
    A. **Cleared inlets and drains throughout the Township**
    B. **Filled potholes throughout the Township**
    C. **Adding stone to roadway edge erosion areas**
    D. **General ROW cleanup**
    E. **Intersection visibility pruning**

2) **Storm Maintenance**
    A. **12.2.25 Storm requiring winter roadway maintenance**
    B. **12.6.25 Storm requiring winter roadway maintenance**
    C. **12.12.25 Brined roadways prior to forecasted winter storm**
    D. **12.14.25 Storm requiring winter roadway maintenance**
    E. **12.23.25 Storm requiring winter roadway maintenance**
    F. **12.26.25 Storm requiring winter roadway maintenance**
    G. **12.27.25 Freezing conditions requiring winter roadway maintenance**

3) **Parks**
    A. **Twice weekly cleaning of restrooms, emptying trash receptacles, and stocking dog bags**
    B. **Repairing washouts and general trail maintenance**
    C. **Pruning and removal of dead trees in all parks and trail systems**
    D. **Fall cleanup of Township properties**
    E. **Zacharias Trail paving project, topsoil added to edges**
    F. **Mt Kirk restroom heater repair/upgrades**

4) **Vehicle/Equipment Maintenance**
    A. **Performed weekly maintenance of all Township vehicles**
    B. **Equipped and tested all vehicles for winter storm maintenance**
    C. **64-25 Water pump replacement**
    D. **64-39 PTO switch repair**

5) **Miscellaneous**
    A. **Setting up and cleaning of Community Hall for rentals and Township events**
    B. **Nike Compost facility open to residents twice weekly**
    C. **Scheduled residential bagged leaf pick up completed**

Private Utility Enterprises, Inc

December 23, 2025

Dan DeMeno
Township of Worcester
1721 Valley Forge Road
Worcester, PA 19490

RE: Berwick STP PA0050393 and Valley Green STP PA0050393
Monthly Operation and Maintenance Report November 2025.

Mr DeMeno,

Attached, please find the summary of analytical results and operation and maintenance activities for the Berwick and Valley Green sewage treatment plants and collection system.

Please feel free to contact me with questions at the above number.

Thank you,

Teresa J Peachey
Office Manager

Cc: John Scully
John Evarts
Christian Jones

215-766-2626
pue@pueinc.com
1000 E Walnut Street
Suite 721
Perkasie, PA 18944

Worcester Township WWTP
Operations and Maintenance Report

November 2025

Non-Routine Maintenance / Events:

Pump Stations

11/03/25 - Meadowood Pump Station-Upon arrival, found the generator had a "low coolant temp" fault. Checked the block heater and it was heating. Flexed the hose and got the thermos-siphon started. Believe the temperature rating of the heater is not hot enough for this engine. Because it is not hot enough, the heater is unable to start the thermos-siphon consistently. Will replace the block heater tomorrow.

11/04/25 - Meadowood Pump Station- Replaced the external block heater for the emergency generator. The new heater's temperature rating is higher than that of the one replaced. Ran the generator in HAND and purged any air from the cooling system. When finished, topped off the radiator with coolant. Will stop and check the generator tomorrow.
(Total time: 1.75 hours)

11/05/25 - Meadowood Pump Station- Checked the generator and verified operation of the new block heater. The coolant temp was at 91° F and no faults were present. Verified there were no leaks and topped off the coolant reservoir.

11/07/25 - Meadowood Pump Station- Callout at 0908 hours for Pumps 1&2 faulted. Upon arrival, found the VFDs for both pumps were faulted with undervoltage faults. Reset the VFDs and both pumps started running. Pumped down the level in the wet well. Pumps both ran a normal on/off cycle without issue. Pumps 1&2 are back online.
(Total time: 1.0 hours)

11/18/25 - Chadwick Pump Station- Plugged in the spare emergency dialer in place of onsite dialer and tried calling out. Tried to call into the dialer and in both tests, the phone line was busy. Contacted Verizon Problem Ticket to start a new problem ticket. Additional information was needed and a ticket could not get started. Will reach out again tomorrow with information needed.
(Total time: 1.0 hour)

11/19/25- Chadwick Pump Station- Contacted Verizon Problem Ticket and started a new problem ticket. Technician scheduled to be onsite Thursday, 11-20.

11/20/2025 - Chadwick Pump Station- Completed daily operations, checked floats and wet well, recorded readings, and maintenance. Verizon technician was onsite and repaired the phone line

for the emergency dialer. Placed a call from the dialer and called into it and was able to communicate with the dialer without issue. The emergency dialer phone line is back online. (Total time: 1.0 hour)

CKS ENGINEERS
AN ARRO CONSULTING COMPANY

RECEIVED
DEC 22 2025
RECEIVED

CKS Engineers
4259 West Swamp Road, Suite 410
Doylestown, PA 18902
P: 215.340.0600
www.cksengineers.com

December 17, 2025
Ref: #7200-208-25

Worcester Township
1721 Valley Forge Road
PO Box 767
Worcester, PA 19490-0767

Attention: Dan DeMeno, Township Manager

Reference: 2025 Roadway Improvement Program
Contract No. 7200-208-25
Estimate No. Three (3)

Dear Dan:

Enclosed are four (4) copies of Estimate No. Three (3) for the above referenced contract in the amount of $45,045.71. Please execute them in the appropriate places and return one (1) copy to us, one (1) copy to the contractor with payment and retain two (2) copies for your file.

The contractor's address is:

Heidelberg Materials Northeast, LLC
409 Stenton Avenue
Flourtown, PA 19031

Please contact us if you have any questions concerning this matter.

Very truly yours,
CKS ENGINEERS
Township Engineers

J. J. Kelso
Construction Manager

JJK/kgc
Encl: Estimate No. Three (3)

cc: John W. Evarts, CKS Engineers
James F. Weiss, CKS Engineers
File

CKS ENGINEERS

Date: December 17, 2025

WORCESTER TOWNSHIP

2025 ROADWAY IMPROVEMENT PROGRAM

CONTRACT NO. 7200-208-25

Bid Amount: $1,029,395.60

Estimate No. Three (3)

Work Performance Cut-Off Date: December 11, 2025

RECEIVED
DEC 22 2025
RECEIVED

Value of Work Complete to Date Under:		
Materials	$979,486.60	
Change Orders (Page #)	$0.00	
Total Value of Work Completed to Date		$979,486.60
Previous Total Value of Work Completed		$973,311.60
Value of Work Completed this Estimate		$6,175.00
Retainage (1% of Total Value of Work Completed to Date)		$9,794.87
Total Value of Work Completed to Date, less Retainage		$969,691.73
Total Value of Work Completed, Previously Certified		$924,646.02
Amount to be Paid to Contractor Under this Estimate		$45,045.71

The sum of Forty-Five Thousand, Forty-Five Dollars and Seventy-One Cents ($45,045.71) is payable to Heidelberg Materials Northeast LLC as a payment for work completed under this Estimate.

Approved: Date 12/19/2025

Heidelberg Materials Northeast LLC

By: Annie L Russo

Approved: Date 12/19/25

CKS Engineers

By: _____

Approved: Date _____

Worcester Township

By: _____

CKS ENGINEERS

Date: December 17, 2025
Estimate No. Three (3)

WORCESTER TOWNSHIP

2025 ROADWAY IMPROVEMENT PROGRAM

CONTRACT NO. 7200-208-25

Bid Amount: $1,029,395.60

Item No.	Description	Units	Qty.	Unit Prices	Amount/ Percent Complete	Total Item Prices
BASE CONTRACT: Crestline Drive, Hillside Circle, Long Meadow Road, Preble Circle, Quail Run, Stony Creek Road, Beyer Road, Overhill Road, E. Mount Kirk Avenue						
1	Concrete Curb Replacements (ADA)	LF	640	$127.20	640	$81,408.00
2	Concrete Sidewalk Replacements (ADA)	SF	4,240	$26.40	4,240	$111,936.00
3	Detectable Warning Surface (ADA) 44 Ramps	SF	272	$62.50	272	$17,000.00
4	Standard Concrete Curb Replacements (Property Owner)	LF	11	$125.00	22	$2,750.00
5	Curb Driveway Depression Replacements (Property Owner)	LF	259	$125.00	299	$37,375.00
6	Pavement Repair - Type I, 3" 19 mm Binder	SY	104	$26.00	117	$3,042.00
7	Full-Width Mill (1-1/2" Depth)	SY	54,012	$2.20	52,822	$116,208.40
8	Leveling/Scratch Course	TON	482	$110.00		$0.00
9	Wearing Course	TON	5,252	$92.00	5,184	$476,928.00
10	Roadway Widening	SY	211	$85.00	201	$17,085.00
11	Replace Traffic Signal Loop - Single	EA	1	$2,071.00	1	$2,071.00
12	Replace Traffic Signal Loop - Double	EA	1	$2,283.00	1	$2,283.00
13	Double Yellow Centerline	LF	350	$3.20	290	$928.00
14	6" White Lane Divider Line	LF	350	$2.40	592	$1,420.80
15	2' x 12' Stop Bar	EA	1	$127.40	1	$127.40
16	2' x 20' Stop Bar	EA	1	$212.40	1	$212.40
17	"Only" Legend	EA	4	$265.50	4	$1,062.00
18	Right Arrow	EA	2	$212.35	2	$424.70
19	Left Arrow	EA	2	$212.35	2	$424.70
20	Misc. Excavation Below Subgrade	CY	5	$210.00		$0.00
					SUBTOTAL - BASE CONTRACT	$872,686.40
ALTERNATE/ADD-ON NO. 1 - Creekside Drive, Pondview Drive and Spring Creek Road						
21	Concrete Curb Replacements (ADA)	LF	100	$127.20	106	$13,483.20
22	Concrete Sidewalk Replacements (ADA)	SF	480	$26.40	990	$26,136.00

CKS ENGINEERS

Date: December 17, 2025
Estimate No. Three (3)

WORCESTER TOWNSHIP

2025 ROADWAY IMPROVEMENT PROGRAM

CONTRACT NO. 7200-208-25

Bid Amount: $1,029,395.60

Item No.	Description	Units	Qty.	Unit Prices	Amount/ Percent Complete	Total Item Prices
23	Detectable Warning Surface (ADA) - 6 Ramps	SF	48	$62.50	48	$3,000.00
24	Full-Width Mill (1-1/2" Depth)	SY	5,796	$2.50	5,796	$14,490.00
25	Leveling/Scratch Course	TON	45	$110.00		$0.00
26	Wearing Course	TON	555	$92.00	523	$48,116.00
27	Misc. Excavation Below Subgrade	CY	5	$225.00	7	$1,575.00
					SUBTOTAL - ALTERNATE ADD-ON NO. 1	$106,800.20
					TOTAL	**$979,486.60**

TOWNSHIP OF WORCESTER
MONTGOMERY COUNTY, PENNSYLVANIA

RESOLUTION 2026-02

RESOLUTION TO SET VARIOUS FEES, ESCROWS AND OTHER PAYMENTS CHARGED FOR CERTAIN TOWNSHIP SERVICES

WHEREAS, various Township Ordinances and State Law provides for the establishment of fees for certain permits, reviews, inspections and/or other services, and as having said fees listed in a single document is of assistance and convenience to the general public;

NOW, THEREFORE, BE IT AND IT IS HEREBY RESOLVED the fees and charges listed in the schedule attached hereto shall be charged by Worcester Township effective this date, and until such time as so amended by the Board of Supervisors by resolution.

BE IT RESOLVED THIS 21TH DAY OF JANUARY 2026

FOR WORCESTER TOWNSHIP

By: _____
Lou Betz, Chair

Attest: _____
Dan DeMeno, Secretary

WORCESTER TOWNSHIP

Fee Schedule
2026

Section I - Residential Building Permits	
See Attached Appendix a	
Section II - Non-Residential Building Permits	
See Attached Appendix a	
Sewer tapping fee per EDU	$3200.00
Section III - Zoning Permits	
Retaining walls up to 4' in height	$28.00
Fences	$28.00
Driveway permit	$28.00
Decks up to 30" above grade and patios	$28.00
Moving or relocating existing accessory structures	$28.00
General zoning permit	$28.00
Business Use & Occupancy Permit	$100.00
Business Use & Occupancy Inspection	$100.00
Solicitation permit per individual soliciting	$28.00
Grading & excavation permit up to three inspections	$365.00
Each additional inspection	$145.00
Stormwater management escrow 7500 sf and greater	$1000.00
Section IV - Permit and Inspection Penalties	
Failure to provide 24 hours notice to cancel inspection cancellation	$50.00
Not ready for inspection per occurrence	$80.00
Failure to correct deficiencies found after two inspections per occurrence	$80.00
Penalty fee for failure to obtain a permit in addition to permit fee	2x permit fee
Section V - Zoning Hearing Board and UCC Appeal Board Fees	
Application fee includes appeals of Zoning Officer determination existing residential	$875.00
Escrow existing residential	$500.00
Application fee all others	$1500.00
Escrow all others	$1000.00
Fee to continue Zoning Hearing Board or UCC Board of Appeals hearing	$325.00
Fee to postpone Zoning Hearing Board or UCC Board of Appeals hearing	$350.00
Transcript copy	Actual
Zoning Officer determination letter	$200.00
Validity challenge to the Zoning Ordinance or Zoning Map	$2000.00
Fee to continue challenge hearing	$200.00
Fee to postpone challenge hearing	$250.00
Section VI - Board of Supervisors Fees	
Application for Conditional Use hearing	$1500.00
Escrow Conditional Use hearing	$1000.00
Fee to continue Conditional Use hearing	$200.00
Fee to postpone Conditional Use hearing	$250.00
Application to amend the Zoning Map	$1500.00
Fee to continue Zoning Map amendment hearing	$400.00
Fee to postpone Zoning Map amendment hearing	$450.00
Zoning Map amendment escrow	$2000.00

Application to amend the Zoning Ordinance	$1500.00
Fee to continue Zoning Ordinance amendment hearing	$200.00
Fee to postpone Zoning Ordinance amendment hearing	$250.00
Zoning Ordinance amendment escrow	$2000.00
VII - SALDO	
Concept Meeting application fee	$500.00
Concept Meeting escrow	$1000.00
Subdivision & Land Development Sketch Plan application fee	$1000.00
Subdivision & Land Development Sketch Plan escrow	$1500.00
Subdivision Residential 1 to 3 lots application fee	$2000.00
Subdivision Residential 1 to 3 lots escrow	$6000.00
Subdivision Residential 4 or more lots base application fee	$4500.00
Additional dwelling unit fee per unit beginning with the 4th lot or unit	$150.00
Escrow for plans with 4 to 20 lots units	$20500.00
Escrow for plans with 21 to 50 lots units	$24500.00
Escrow for plans with 51 or more lots units	$34500.00
Land Development Non-residential base application fee	$5500.00
Additional fee per 1000 sq ft of gross floor area	$50.00
Escrow Non-residential Land Development	$16500.00
Transferable Development Rights application fee	$475.00
Transferable Development Rights escrow	$2500.00
Escrow Releases	$110.00
Act 209 Traffic Impact Fee North Transportation Service Area per peak PM trip	$3977.00
Act 209 Traffic Impact Fee South Transportation Service Area per peak PM trip	$3125.00
Section VIII - Highway and Road Fees	
Highway road occupancy permit	$53.00
Highway road inspection fees	By escrow
Section IX - Sewer Rental Fees and Certifications	
Sewer rental quarterly fee residential	$141.52
Sewer rental quarterly fee commercial per 1000 gallons	$9.27
Sewer certification	$30.00
Certified letter fee	$25.00
Property posting	$50.00
Water shut off & turn on	$30.00
Return check fee	Actual
Section X - Fire Alarm Fees	
Fire alarm system registration fee	No fee
False alarm penalty failure to register	$50.00
False alarm penalty third offense per year	$100.00
False alarm penalty fourth offense per year	$200.00
False alarm penalty fifth and subsequent offenses per year	$300.00
Section XI - Park Rental Fees	
Community Hall rental fee Township resident per event	$50.00
Community Hall rental fee Non-Township resident per event	$100.00

Pavilion rental fee Township resident up to 25 individuals	$25.00
Pavilion rental fee Township resident 26-50 individuals	$50.00
Pavilion rental fee Township resident 51-75 individuals	$75.00
Pavilion rental fee Township resident 76-100 individuals	$100.00
Pavilion rental fee Non-Township resident up to 25 individuals	$50.00
Pavilion rental fee Non-Township resident 26-50 individuals	$100.00
Pavilion rental fee Non-Township resident 51-75 individuals	$150.00
Pavilion rental fee Non-Township resident 76-100 individuals	$200.00
Field or court rental fee single use Township resident up to four hours	$25.00
Field or court rental fee single use Township resident each additional hour	$5.00
Field or court rental fee single use Non-Township resident up to four hours	$50.00
Field or court rental fee single use Non-Township resident each additional hour	$5.00
Field or court rental fee, Spring season use (March 1 to July 31)	
One to two days per week, per field	$550.00
Three to four days per week, per field	$770.00
Five to seven days per week, per field	$1,100.00
Field or court rental fee, Fall season use (August 1 to November 30)	
One to two days per week, per field	$450.00
Three to four days per week, per field	$630.00
Five to seven days per week, per field	$900.00
Seasonal Field Rental Discounts: Discount for minimum 65% Worcester resident participants 50%. Discount for minimum 90% youth participants 25% discounts may be combined.	
Section XII - Tax Collector Fees	
Tax certification	$30.00
Duplication of tax bill	$5.00
Insufficient funds fee does not include bank fees	$13.00
Section XIII - Other Fees and Charges	
Credit card convenience charge	Actual
Township-authorized services by Township consultants hourly fee	Actual
Township-authorized services by Township consultants reimbursables	Actual
UCC building permit fee per building permit	$4.50
Copies for Right-to-Know requests 8.5"x11" single-sided page	$0.25
Copies for Right-to-Know requests 8.5"x11" double-sided page	$0.50
Copies for Right-to-Know requests 11"x17" single-sided page	$0.50
Copies for Right-to-Know requests 11"x17" double-sided page	$1.00
Copies for Right-to-Know requests out-of-house copies	Actual
Copies for Right-to-Know requests storage devices (thumb drives ect.)	Actual
Mileage reimbursement	IRS rate
Miscellaneous charges postage toll calls delivery fees etc.	Actual

NOTES:

1 - Floor area. Floor Area is measured from outside wall to outside wall.

2 - New Residential SF Calculation. For new residential construction and additions to existing residential units, square footage shall include living spaces on all floors, basements, attached garages & attics over six feet in

3 - Total Cost Calculation. The total cost of all the construction portions of a project is generally based upon the sum of the construction contract(s) and otherdirect construction costs; thisdoes not include the compensation paid to the engineer, architect and consultants or the cost of the land. The Township has the final

determination in accepting the submitted cost of construction as provided on the permit application and may

4 - Township Organization Status. For an organization to qualify as a Township-based organization, at least

65% of participants must reside in Worcester Township. Documentation that verifies participant residency must be furnished to the Township, and the Township has sole discretion in determining if the residency has

5 - Past Due Invoices. Invoices that are past due by more than thirty (30) days are subject to interest rate

charges as provided by law. Charges for services that involve a late fee as stated in this resolution are not

6 - Omissions and Errors. The failure to list, in this Resolution, a fee that is properly listed elsewhere shall not

obviate the responsibility to pay that fee.

7 - "by escrow agreement". Permits for miscellaneous construction and highway/road inspections will be paid

with funds posted in escrow. From this escrow the Township will deduct actual costs incurred.

8 - False fire alarm fines may be reduced or waived by the Fire Marshal if the Fire Marshal determines, in his or

her sole discretion, the tenant or property owner is making a good faith effort to address and correct the

Appendix a

BARRY ISETT & associates INC

COST OF SERVICES & BILLING METHODS

BARRY ISETT & associates INC
MULTI-DISCIPLINE ENGINEERS AND CONSULTANTS

CODE DEPARTMENT HOURLY FEE SCHEDULE 2025

PA UCC Services	
Per hour	$125.00
Property Maintenance Services	
Per hour	$ 98.00
Zoning/Local Code Enforcement Services	
Per hour	$ 98.00
Rental Inspection Program	
Per hour	$ 98.00
Flood Plain Management Services	
Per hour	$ 125.00
Fire Inspection Services	
Per hour	$ 105.00
Consultation Services	
Per hour	$ 150.00
After Hours Inspections	
Per hour	$ 220.00* (*1 hour minimum)

Code Inspection & Plan Review

Revised August 7, 2023

BARRY ISETT & associates INC
MULTI-DISCIPLINE ENGINEERS AND CONSULTANTS

PENNSYLVANIA UNIFORM CONSTRUCTION CODE

PART I – Building/General Permit Fee Schedule

RESIDENTIAL

(One- and Two-Family Dwellings)

PERMIT FEES

New Construction (10 inspections)	
Plan review per submission	$250.00
Single family dwelling up to 3,500 gross square feet	$1,500.00
Per 100 gross square feet or fraction thereof above 3,500 square feet	$25.00

- *Mechanical, Electrical, and Plumbing permit fees included.*
- *Gross square footage shall include basement, each floor level, garage, decks, and porches.*
- *Measurements shall be from exterior face of wall to exterior face of wall.*
- *Sprinkler and Fire Alarm permit fees are additional.*

Additions (5 inspections)	
Plan review per submission	$150.00
Single family dwelling addition up to 500 gross square feet	$600.00
Enclosed porches/sunrooms (unconditioned) up to 500 gross square feet	$375.00
Per 100 gross square feet or fraction thereof above 500 square feet	$25.00

- *Mechanical, Electrical and Plumbing permit fees included.*
- *Gross square footage shall include basement, each floor level, garage, decks, and porches.*
- *Gross square footage shall include the entire project area where an addition is accompanied by alterations to the existing structure.*
- *Measurements shall be from exterior face of wall to exterior face of wall.*
- *Enclosed porches and three season rooms shall be priced as an addition.*
- *Sprinkler and Fire Alarm permit fees are additional.*

Alterations and Renovations (2 inspections)	
Plan review per submission	$150.00
Up to 1,000 gross square feet	$300.00
Per 100 gross square feet or fraction thereof above 1,000 square feet	$25.00

- *Mechanical, Electrical, and Plumbing permit fees are additional.*
- *Sprinkler and Fire Alarm permit fees are additional.*
- *Alterations that cannot be calculated by square footage will be calculated per miscellaneous construction fees.*

Decks (3 inspections)	
Plan review per submission	$100.00
Up to 500 gross square feet	$250.00
Per 100 gross square feet or fraction thereof above 500 square feet	$25.00
Including a roof over a deck	$250.00

- *Mechanical, Electrical, and Plumbing permit fees are additional.*
- *Screened in porches shall be priced as a deck.*
- *Enclosed porches and three season rooms must be priced as an addition.*

Accessory Buildings and Detached Garages (4 inspections)	
Plan review per submission	$150.00
Up to 1,500 gross square feet	$400.00
Per 100 gross square feet or fraction thereof above 1,500 square feet	$25.00
Where an accessory structure also includes finished and conditioned space	$150.00 additional

- *Mechanical, Electrical, and Plumbing permit fees are additional.*

Solar Array (2 inspections)	
Plan review per submission	$150.00
2% of total cost of construction (materials and labor)	$300.00 minimum

- *Electrical permit fees included.*
- *Roof mount or ground mount arrays.*

Generators (2 inspections)	
Plan review per submission	$150.00
Per generator	$250.00

- *Electrical and mechanical permit fees included.*

Demolition Permit	
Permit/documentation review per submission	$120.00
Garage/accessory structures (1 inspection)	$120.00
Single/double home (2 inspections)	$250.00

Manufactured and Modular Homes	
Plan review per submission	$150.00
Manufactured home with basement up to 2,500 gross square feet (7 inspections)	$895.00
Manufactured home with pier foundation up to 2,500 gross square feet (5 inspections)	$795.00
Modular home up to 2,500 gross square feet (7 inspections)	$895.00
Per 100 gross square feet or fraction thereof above 2,500 square feet	$25.00

- *Decks, porches, garages, or other attachments are additional.*
- *Utility connections included.*

Swimming Pools/Spas	
Plan review per submission	$150.00
Spa or hot tub (1 inspection)	$150.00
Above-ground pool (2 inspections)	$300.00
In-ground pool (3 inspections)	$450.00

- *Includes Electric permit.*

Miscellaneous Building Construction Only (Number of inspections to be determined)	
Plan Review Per Submission	$150.00
2% of total cost of construction (materials & labor)	$200.00 minimum

- *Mechanical, Electrical, and Plumbing permit fees are additional.*
- *Sprinkler and Fire Alarm permit fees are additional.*
- *Any building projects not covered elsewhere in Part I of this fee schedule shall be priced as miscellaneous building construction.*

Note: A $4.50 surcharge per permit is required to be assessed on each permit issued, in accordance with Pennsylvania Act 157 of 2006.

PENNSYLVANIA UNIFORM CONSTRUCTION CODE

PART II – Electrical Permit Fee Schedule

RESIDENTIAL

(One- and Two-Family Dwellings)

PERMIT FEES

Electrical Alterations Only (2 inspections each)	
Plan review per submission	$120.00
Up to 1,000 gross square feet	$250.00
Per 100 gross square feet or fraction thereof above 1,000 square feet	$25.00

- *Projects with only electrical inspections shall be priced by the electrical alterations only schedule.*
- *Alterations that cannot be calculated by square footage will be calculated per miscellaneous Electrical only fees.*

Services and Feeders (1 inspection each)	
Not over 100 amps	$150.00
101 amps to 400 amps	$250.00
Feeders and panel boards not over 400 amps	$100.00

- *Over 400 amps require commercial fees.*
- *This schedule covers service upgrades, repairs, and replacements.*

Miscellaneous Electrical Only (2 inspections)	
Plan review per submission	$120.00
2% of total cost of construction (materials & labor)	$150.00 minimum

- *Building, Mechanical, and Plumbing permit fees are additional.*
- *Any electrical projects not covered elsewhere in Part II of this fee schedule shall be priced as miscellaneous electrical.*

Note: A $4.50 surcharge per permit is required to be assessed on each permit issued, in accordance with Pennsylvania Act 157 of 2006.

PENNSYLVANIA UNIFORM CONSTRUCTION CODE

PART III – Plumbing Permit Fee Schedule

RESIDENTIAL

(One- and Two-Family Dwellings)

PERMIT FEES

Plumbing Alterations Only	
Plan review per submission	$120.00
Per fixture (2 inspections – rough and final)	$50.00
	$175.00 Minimum

- *Projects with only plumbing inspections shall be priced by the plumbing alterations only schedule*
- *Alterations that cannot be calculated per fixture will be calculated per miscellaneous plumbing only fees.*

Utility Plumbing Inspections	
Plan review per submission	$100.00
Utility sewer connection (1 inspection)	$150.00 minimum
Utility water connection (1 inspection)	$150.00 minimum

Miscellaneous Plumbing Only (2 inspections)	
Plan review per submission	$120.00
2% of total cost of construction (materials & labor)	$150.00 minimum

- *Building, Mechanical, and Electrical permit fees are additional.*
- *Sprinkler and Fire Alarm permit fees are additional.*
- *Any plumbing projects not covered elsewhere in Part III of this fee schedule shall be priced as miscellaneous plumbing only.*

Note: A $4.50 surcharge per permit is required to be assessed on each permit issued, in accordance with Pennsylvania Act 157 of 2006.

PENNSYLVANIA UNIFORM CONSTRUCTION CODE

PART IV – Mechanical Permit Fee Schedule

RESIDENTIAL

(One- and Two-Family Dwellings)

PERMIT FEES

Mechanical Appliances Only	
Plan review per submission	$120.00
Per first individual new appliance (2 inspections)	$250.00
Per each additional Individual new appliance	$75.00
Per Individual Replacement Appliance (1 inspection)	$150.00
Oil tank replacement, relocation, installation, removal & closure (1 inspection)	$150.00
Alterations (2 inspections) (gas lines, duct work, etc.)	$250.00

- *Includes associated duct work/piping.*
- *Large scale HVAC, refrigeration, and process equipment will be based on commercial fees.*
- *Alterations that cannot be calculated per the mechanical appliances only fee schedule will be calculated per miscellaneous Mechanical only fees.*

Miscellaneous Mechanical Only (2 inspections)	
Plan Review Per Submission	$120.00
2% of total cost of construction (materials & labor)	$150.00 minimum

- *Building, Plumbing, and Electrical permit fees are additional.*
- *Any mechanical projects not covered elsewhere in Part IV of this fee schedule shall be priced as miscellaneous mechanical only.*

Note: A $4.50 surcharge per permit is required to be assessed on each permit issued, in accordance with Pennsylvania Act 157 of 2006.

PENNSYLVANIA UNIFORM CONSTRUCTION CODE

PART V – Fire Suppression & Detection Systems Permit Fee Schedule

RESIDENTIAL

(One- and Two-Family Dwellings)

PERMIT FEES

NFPA 13D or IRC P2904 Sprinkler System (2 inspections)	
Plan review fee per submission	$120.00
1 to 75 heads	$250.00
Each additional head over 75	$1.00

- *NFPA 13 sprinkler system, NFPA 13R sprinkler system, NFPA 72 fire alarm system, or any alternative fire suppression system will be priced per the commercial fee schedule.*
- *Utility water connection fee per plumbing fee schedule.*
- *Additional inspections charge re-inspection fees.*

NFPA 13D or IRC P2904 Sprinkler System Alterations Only (2 inspections)	
Plan review per submission	$120.00
2% of total cost of construction (materials & labor)	$150.00 minimum

- *Building, Plumbing, Mechanical and Electrical permit fees are additional.*
- *Any NFPA 13D or IRC P2904 sprinkler system projects not covered elsewhere in Part V of this fee schedule shall be priced as NFPA 13D or IRC P2904 sprinkler system alterations only.*
- *Additional inspections charge re-inspection fees.*

Note: A $4.50 surcharge per permit is required to be assessed on each permit issued, in accordance with Pennsylvania Act 157 of 2006.

BARRY ISETT & associates INC
MULTI-DISCIPLINE ENGINEERS AND CONSULTANTS

PENNSYLVANIA UNIFORM CONSTRUCTION CODE

PART I – Building/General Permit Fee Schedule

NON-RESIDENTIAL

(Commercial & Residential – other than One- and Two-Family Dwellings)

PERMIT FEES

New Construction (Number of inspections to be determined)	
Plan review per 100 gross square feet or fraction thereof	$10.00 $500.00 Minimum
Inspections per 100 gross square feet or fraction thereof	$30.00 $500.00 minimum

- *Mechanical, Electrical, and Plumbing permit fees included.*
- *Sprinkler and Fire Alarm permit fees are additional.*
- *Gross square footage shall include basement, each floor level, garage, decks, swimming pools, and porches. Measurements shall be from exterior face of wall to exterior face of wall.*
- *Additional plan review submissions will be reviewed at a rate of $150.00/hr. (1 hr. min.).*
- *Phased construction that requires additional inspections may be charged $150.00/hr. (1 hr. min.).*
- *Additional inspections shall be charged at a rate of $120.00/hr. (1 hr. min.).*

Additions (Number of inspections to be determined)	
Plan review per 100 gross square feet or fraction thereof	$10.00 $250.00 minimum
Inspections per 100 gross square feet or fraction thereof	$30.00 $500.00 minimum

- *Mechanical, Electrical, and Plumbing permit fees included.*
- *Sprinkler and Fire Alarm permit fees are additional.*
- *Gross square footage shall include basement, each floor level, garage, decks, and porches.*
- *Measurements shall be from exterior face of wall to exterior face of wall.*
- *Additional plan review submissions will be reviewed at a rate of $150.00/hr. (1 hr. min.).*
- *Phased construction that requires additional inspections may be charged $120.00/hr. (1 hr. min.).*
- *Additional inspections shall be charged at a rate of $120.00/hr. (1 hr. min.).*

Renovations/Alterations/Change of Use (Number of inspections to be determined)	
Plan review per 100 gross square feet or fraction thereof	$10.00 250.00 minimum
Inspections per 100 gross square feet or fraction thereof	$30.00 $360.00 minimum

- *Mechanical, Electrical, and Plumbing permit fees are additional.*
- *Sprinkler and Fire Alarm permit fees are additional.*
- *Additional plan review submissions will be reviewed at a rate of $150.00/hr. (1 hr. min.).*
- *Alterations that cannot be calculated by square footage will be calculated per miscellaneous construction fees.*
- *Phased construction that requires additional inspections may be charged $120.00/hr. (1 hr. min.).*
- *Additional inspections shall be charged at a rate of $120.00/hr. (1 hr. min.).*

Demolition (3 inspections maximum)	
Plan review fee per submission	$120.00
Buildings up to 5,000 gross square feet	$300.00 minimum
Per 100 gross square feet or fraction thereof above 5,000 square feet	$25.00

- *Additional inspections shall be charged at a rate of $120.00/hr. (1 hr. min.).*

Solar Array (Number of inspections to be determined)	
Plan review 1% of total cost of construction (materials & labor)	$150.00 minimum
2% of total cost of construction (materials & labor)	$300.00 minimum

- *Additional plan review submissions will be reviewed at a rate of $150.00/hr. (1 hr. min.).*
- *Phased construction that requires additional inspections may be charged $120.00/hr. (1 hr. min.).*
- *Additional inspections shall be charged at a rate of $120.00/hr. (1 hr. min.).*

Pallet Racking or Conveyers (Number of inspections to be determined)	
Plan review per 100 gross square feet or fraction thereof	$15.00 $225.00 minimum
Inspections per 100 gross square feet or fraction thereof of work area	$8.50 $360.00 minimum

- *Additional plan review submissions will be reviewed at a rate of $150.00/hr. (1 hr. min.).*
- *Phased construction that requires additional inspections may be charged $100.00/hr. (1 hr. min.).*
- *Additional inspections shall be charged at a rate of $120.00/hr. (1 hr. min.).*

Miscellaneous Construction Building Only (Number of inspections to be determined)	
Plan review 1% of total cost of construction (materials and labor)	$120.00 minimum
2% of total cost of construction (materials & labor)	$250.00 minimum

- *Cell towers, retaining walls, roofs, signs, ramps, decks, swimming pools, etc.*
- *Mechanical, Electrical, and Plumbing permit fees are additional.*
- *Phased construction that requires additional inspections may be charged $120.00/hr. (1 hr. min.).*
- *Additional plan review submissions will be reviewed at a rate of $150.00/hr. (1 hr. min.).*
- *Any building projects not covered elsewhere in Part I of this fee schedule shall be priced as miscellaneous building construction.*
- *Additional inspections shall be charged at a rate of $120.00/hr. (1 hr. min.).*

Note: A $4.50 surcharge per permit is required to be assessed on each permit issued, in accordance with Pennsylvania Act 157 of 2006.

PENNSYLVANIA UNIFORM CONSTRUCTION CODE

PART II – Electrical Permit Fee Schedule

NON-RESIDENTIAL

(Commercial & Residential – other than One- and Two-Family Dwellings)

PERMIT FEES

Electrical Only New Construction (5 inspections maximum)	
Plan review per 100 gross square feet or fraction thereof	$5.00 $200.00 minimum
Inspections per 100 gross square feet or fraction thereof	$12.00 $500.00 minimum

- *Additional plan review submissions will be reviewed at a rate of $150.00/hr. (1 hr. min.).*
- *Phased construction that requires additional inspections may be charged $150.00/hr. (1 hr. min.).*

Electrical Only Additions (5 inspections maximum)	
Plan review per 100 gross square feet or fraction thereof	$5.00 $200.00 minimum
Inspections per 100 gross square feet or fraction thereof	$12.00 $500.00 minimum

- *Additional plan review submissions will be reviewed at a rate of $150.00/hr. (1 hr. min.).*
- *Phased construction that requires additional inspections may be charged $120.00/hr. (1 hr. min.).*

Electrical Only Alterations (Number of inspections to be determined)	
Plan review per 100 gross square feet or fraction thereof	$5.00 $100.00 minimum
Inspections per 100 gross square feet or fraction thereof	$12.00 $250.00 minimum

- *Includes electric services, feeders, panel boards, signs, motors, generators, transformers, vaults, enclosures, HVAC electrical connections, etc.*
- *Phased construction that requires additional inspections may be charged $120.00/hr. (1 hr. min.).*
- *Additional plan review submissions will be reviewed at a rate of $150.00/hr. (1 hr. min.).*
- *Alterations that cannot be calculated by square footage will be calculated per miscellaneous electrical only fees.*

Swimming Pools, Spas	
Three-year State Certification	Quote required

Miscellaneous Electrical Only (Number of inspections to be determined)	
Plan review 1% of total cost of construction (materials and labor)	$120.00 minimum
2% of total cost of construction (materials & labor)	$250.00 minimum

- *Cell towers, retaining walls, roofs, signs, ramps, decks, swimming pools etc.*
- *Phased construction that requires additional inspections may be charged $120.00/hr. (1 hr. min.).*
- *Additional plan review submissions will be reviewed at a rate of $150.00/hr. (1 hr. min.).*
- *Any electrical projects not covered elsewhere in Part II of this fee schedule shall be priced as miscellaneous electrical only.*

Note: A $4.50 surcharge per permit is required to be assessed on each permit issued, in accordance with Pennsylvania Act 157 of 2006.

PENNSYLVANIA UNIFORM CONSTRUCTION CODE

PART III – Plumbing Permit Fee Schedule

NON-RESIDENTIAL

(Commercial & Residential – other than One- and Two-Family Dwellings)

PERMIT FEES

Plumbing Only New Construction (5 inspections maximum)	
Plan review per 100 gross square feet or fraction thereof	$5.00 $200.00 minimum
Inspections per 100 gross square feet or fraction thereof	$12.00 $500.00 minimum

- *Additional plan review submissions will be reviewed at a rate of $150.00/hr. (1 hr. min.).*
- *Phased construction that requires additional inspections may be charged $120.00/hr. (1 hr. min.).*

Plumbing Only Additions (5 inspections maximum)	
Plan review per 100 gross square feet or fraction thereof	$5.00 $200.00 minimum
Inspections per 100 gross square feet or fraction thereof	$12.00 $500.00 minimum

- *Additional plan review submissions will be reviewed at a rate of $150.00/hr. (1 hr. min.).*
- *Phased construction that requires additional inspections may be charged $120.00/hr. (1 hr. min.).*

Plumbing Only Alterations (Number of inspections to be determined)	
Plan review per 100 gross square feet or fraction thereof	$5.00 $120.00 minimum
Inspections per 100 gross square feet or fraction thereof	$12.00 $250.00 minimum

- *Additional plan review submissions will be reviewed at a rate of $150.00/hr. (1 hr. min.).*
- *Phased construction that requires additional inspections may be charged $120.00/hr. (1 hr .min.).*
- *Alterations that cannot be calculated by square footage will be calculated per miscellaneous plumbing only fees.*

Miscellaneous Plumbing Only (Number of inspections to be determined)	
Plan review 1% of total cost of construction (materials & labor)	$120.00 minimum
2% of total cost of construction (materials & labor)	$250.00 minimum

- *Cell towers, retaining walls, roofs, signs, ramps, decks, swimming pools etc.*
- *Additional plan review submissions will be reviewed at a rate of $150.00/hr. (1 hr. min.).*
- *Phased construction that requires additional inspections may be charged $120.00/hr. (1 hr. min.).*
- *Any plumbing projects not covered elsewhere in Part III of this fee schedule shall be priced as miscellaneous plumbing only.*

Note: A $4.50 surcharge per permit is required to be assessed on each permit issued, in accordance with Pennsylvania Act 157 of 2006.

PENNSYLVANIA UNIFORM CONSTRUCTION CODE

PART IV – Mechanical Permit Fee Schedule

NON-RESIDENTIAL

(Commercial & Residential – other than One- and Two-Family Dwellings)

PERMIT FEES

Mechanical Only New Construction (5 inspections maximum)	
Plan review per 100 gross square feet or fraction thereof	$5.00 $200.00 minimum
Inspections per 100 gross square feet or fraction thereof	$12.00 $500.00 minimum

- *Additional plan review submissions will be reviewed at a rate of $150.00/hr. (1 hr. min.).*
- *Phased construction that requires additional inspections may be charged $120.00/hr. (1 hr. min.).*

Mechanical Only Additions (5 inspections maximum)	
Plan review per 100 gross square feet or fraction thereof	$5.00 $200.00 minimum
Inspections per 100 gross square feet or fraction thereof	$12.00 $500.00 minimum

- *Additional plan review submissions will be reviewed at a rate of $150.00/hr. (1 hr. min.).*

Mechanical Only Alterations	
Plan review per 100 gross square feet or fraction thereof	$5.00 $100.00 minimum
Inspections per 100 gross square feet or fraction thereof	$12.00 $250.00 minimum

- *Includes associated duct work/piping.*
- *Electrical hook-ups require an electrical permit.*
- *Additional plan review submissions will be reviewed at a rate of $150.00/hr. (1 hr. min.).*
- *Phased construction that requires additional inspections may be charged $120.00/hr. (1 hr. min.).*
- *Alterations that cannot be calculated by square footage will be calculated per misc. fees.*

Commercial Hood and Duct Systems and Process Equipment Exhausts	
Plan review 1% of total cost of construction (materials and labor)	$150.00 minimum
2% of total cost of construction (materials and labor)	$300.00 minimum

- *Includes associated duct work/piping.*
- *Electrical hook-ups require an electrical permit.*
- *Additional plan review submissions will be reviewed at a rate of $150.00/hr. (1 hr min).*

Miscellaneous Mechanical only (Number of inspections to be determined)	
Plan review 1% of total cost of construction (materials and labor)	$100.00 minimum
2% of total cost of construction (materials & labor)	$200.00 minimum

- *Includes associated duct work/piping.*
- *Additional plan review submissions will be reviewed at a rate of $150.00/hr. (1 hr. min.).*
- *Phased construction that requires additional inspections may be charged $120.00/hr. (1 h.r min.).*

Note: A $4.50 surcharge per permit is required to be assessed on each permit issued, in accordance with Pennsylvania Act 157 of 2006.

PENNSYLVANIA UNIFORM CONSTRUCTION CODE

PART V – Fire Suppression & Detection Systems Permit Fee Schedule

NON-RESIDENTIAL

(Commercial & Residential – other than One- and Two-Family Dwellings)

PERMIT FEES

Fire Sprinkler Systems (Number of inspections to be determined)	
Plan review per 100 gross square feet or fraction thereof	$1.50 $250.00 Minimum
Inspection for 1 to 75 heads	$350.00
Inspection for each additional head over 75	$1.00
Fire line inspection per linear foot	$0.15 $350.00 Minimum
Fire pump inspection	$450.00
Fire loop inspection per linear foot	$0.15 $350.00 Minimum

- *Additional plan review submissions will be reviewed at a rate of $150.00/hr. (1 hr. min.).*
- *Phased construction that requires additional inspections may be charged $120.00/hr. (1 hr. min.).*

Fire Detection/Alarm Systems (Number of inspections to be determined)	
Plan review per 100 gross square feet or fraction thereof	$1.50 $250.00 Minimum
Inspections per 100 gross square feet or fraction thereof	$10.00 $250.00 Minimum

- *Additional plan review submissions will be reviewed at a rate of $150.00/hr. (1 hr. min.).*
- *Phased construction that requires additional inspections may be charged $120.00/hr. (1 hr. min.).*

ANSUL or Alternate Fire Suppression System (Number of inspections to be determined)	
Plan review 1% of total cost of construction (materials and labor)	$150.00 Minimum
2% of total cost of construction (materials and labor)	$300.00 Minimum

- *Additional plan review submissions will be reviewed at a rate of $150.00/hr. (1 hr. min.).*
- *Phased construction that requires additional inspections may be charged $120.00/hr. (1 hr. min.).*
- *Utility water connection fee per plumbing fee schedule.*

Sprinkler System Alterations Only (2 inspections)	
Plan review 1% of total cost of construction (materials & labor)	$150.00 Minimum
2% of total cost of construction (materials & labor)	$300.00 Minimum

- *Additional plan review submissions will be reviewed at a rate of $150.00/hr. (1 hr. min.).*
- *Additional inspections charge re-inspection fees.*
- *Building, Plumbing, Mechanical and Electrical permit fees are additional.*
- *Any sprinkler or alarm system projects not covered elsewhere in Part V of this fee schedule shall be priced as sprinkler system alterations only.*

Note: A $4.50 surcharge per permit is required to be assessed on each permit issued, in accordance with Pennsylvania Act 157 of 2006.

TOWNSHIP OF WORCESTER
MONTGOMERY COUNTY, PENNSYLVANIA

RESOLUTION 2026-06

A RESOLUTION TO APPOINT AN
ALTERNATE MEMBER TO THE PLANNING COMMISSION

WHEREAS, pursuant to Act 42 of 2015, a municipality may appoint an Alternative Member to serve on its Planning Commission, in accordance with the provisions of said Act; and,

WHEREAS, the Board of Supervisors desires to appoint an Alternate Member to the Worcester Township Planning Commission; and,

NOW, THEREFORE, the Board of Supervisors does hereby appoint Bill McGrane to the position of Alternate Member of the Worcester Township Planning Commission, for the balance of a four-year term that shall expire on December 31, 2029.

APPROVED BY MOTION OF THE BOARD OF SUPERVISORS ON THE 21ST DAY OF JANUARY, 2026.

FOR WORCESTER TOWNSHIP

By: _____
Lou Betz, Chair
Board of Supervisors

Attest: _____
Dan DeMeno, Secretary